No. 678,673. Patented July 16, 1901.

J. MATTHEWS.

BICYCLE RACING MACHINE.

(Application filed Aug. 22, 1900.)

(No Model.) 2 Sheets—Sheet 1.

Fig. 1

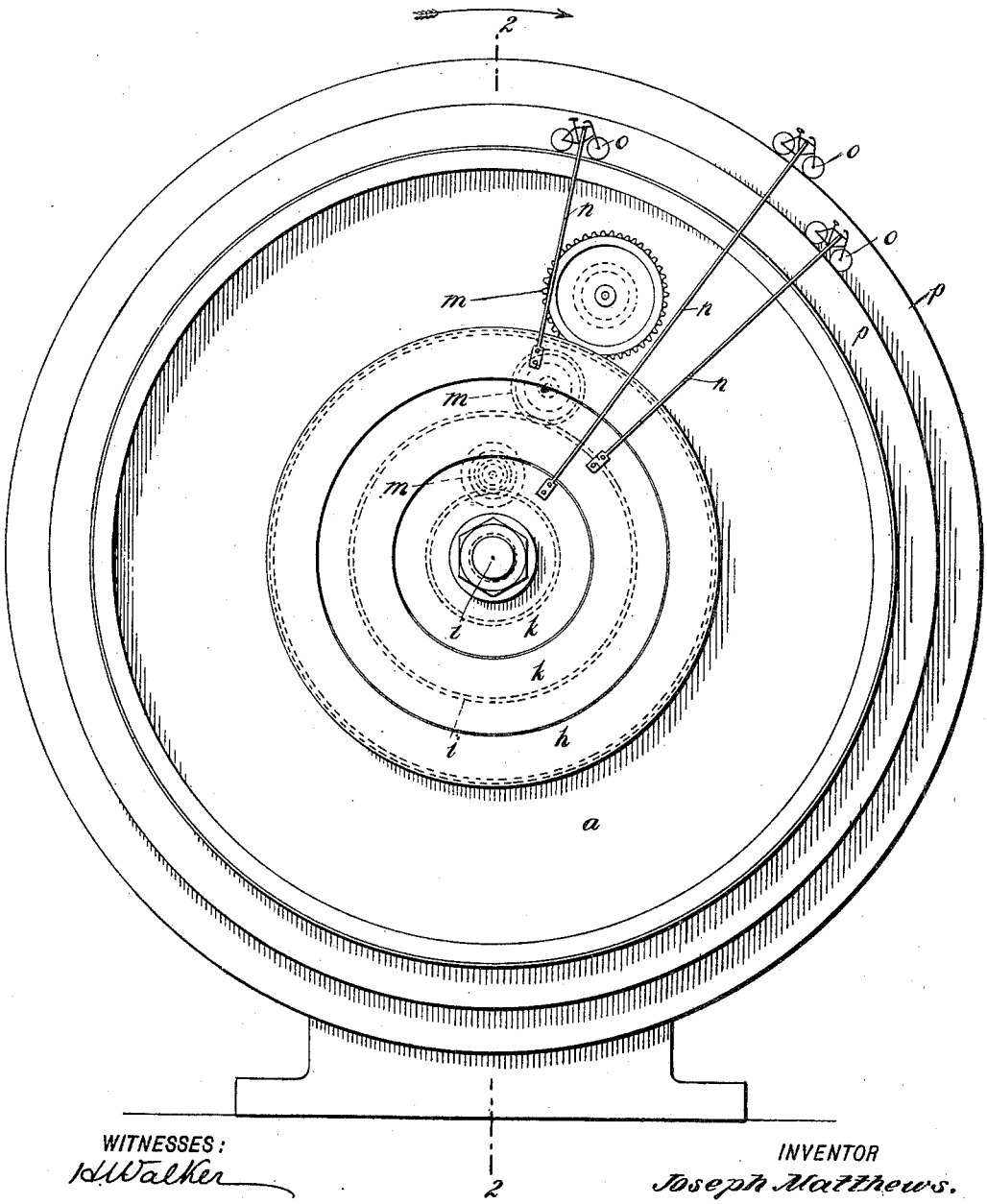

WITNESSES:
H. Walker
J. B. Owens.

INVENTOR
Joseph Matthews.
BY Munn & Co.
ATTORNEYS

THE NORRIS PETERS CO., PHOTO-LITHO., WASHINGTON, D. C.