J. D. PEDERSEN.

FIREARM.

APPLICATION FILED NOV. 22, 1912.

1,071,173. Patented Aug. 26, 1913.

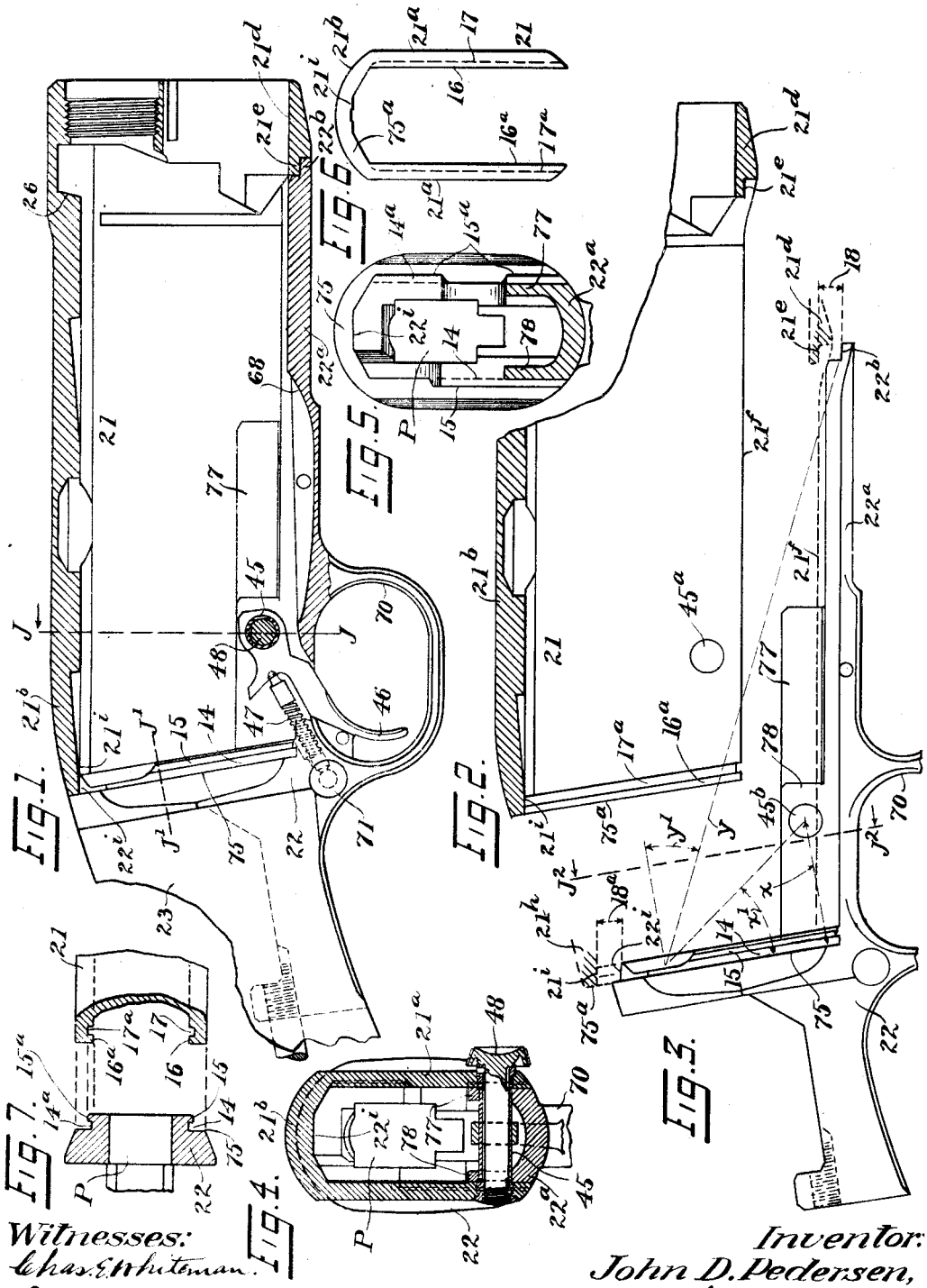

Witnesses:
Chas. E. Whiteman.
H. D. Penney

Inventor:
John D. Pedersen,
By his Attorney, F. H. Richards.