(No Model.)

L. MYERS.

UNDERGROUND CABLE FOR STREET CAR PROPULSION.

No. 265,273. Patented Oct. 3, 1882.

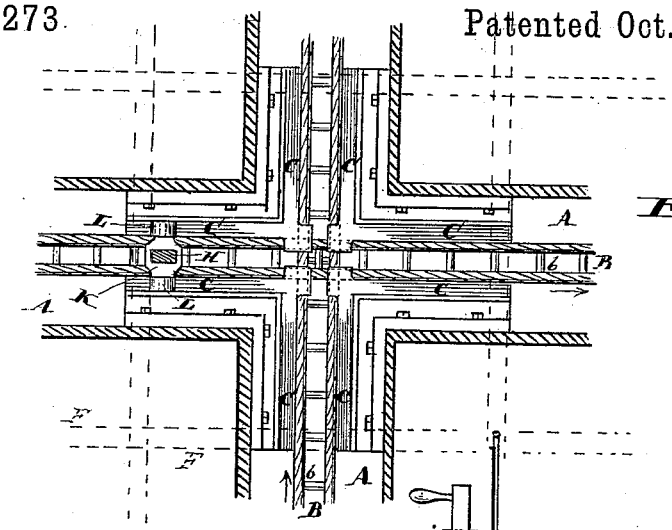

Fig. 1

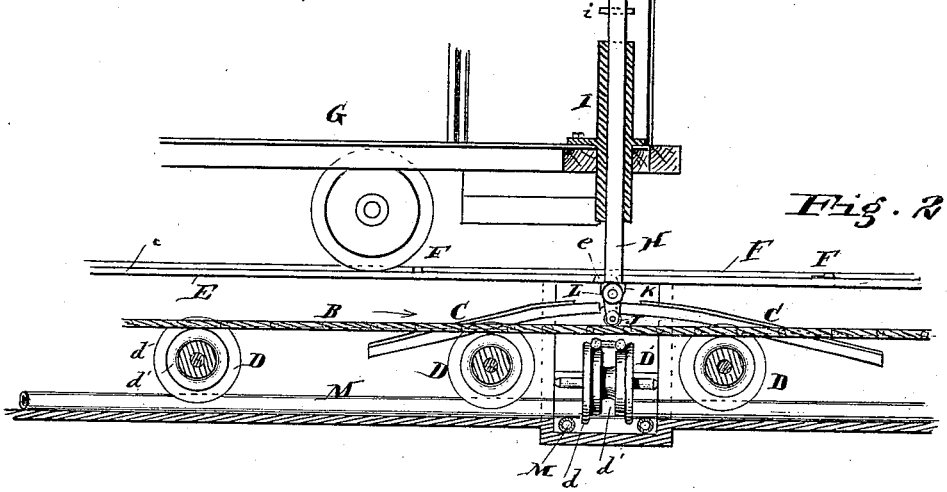

Fig. 2

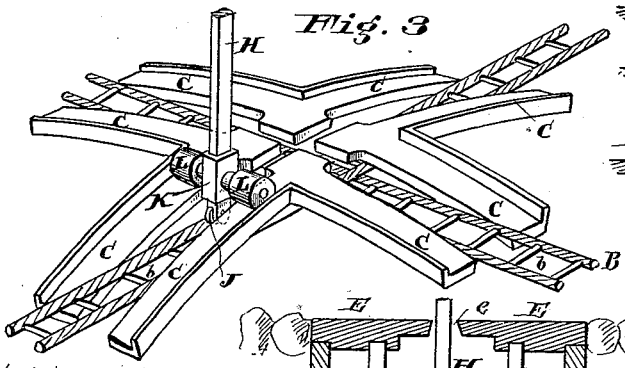

Fig. 3

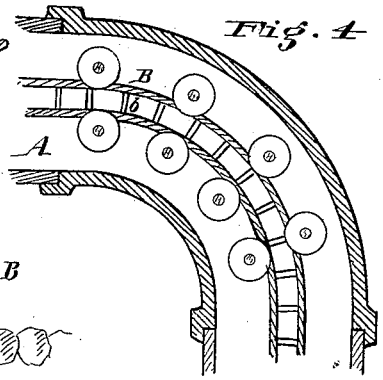

Fig. 4

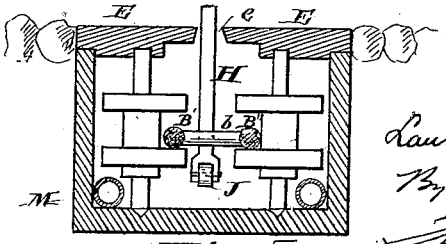

Fig. 5.

Attests

L. J. Matos.

Inventor

Laurence Myers

By his atty.

N. PETERS. Photo-Lithographer. Washington, D. C.