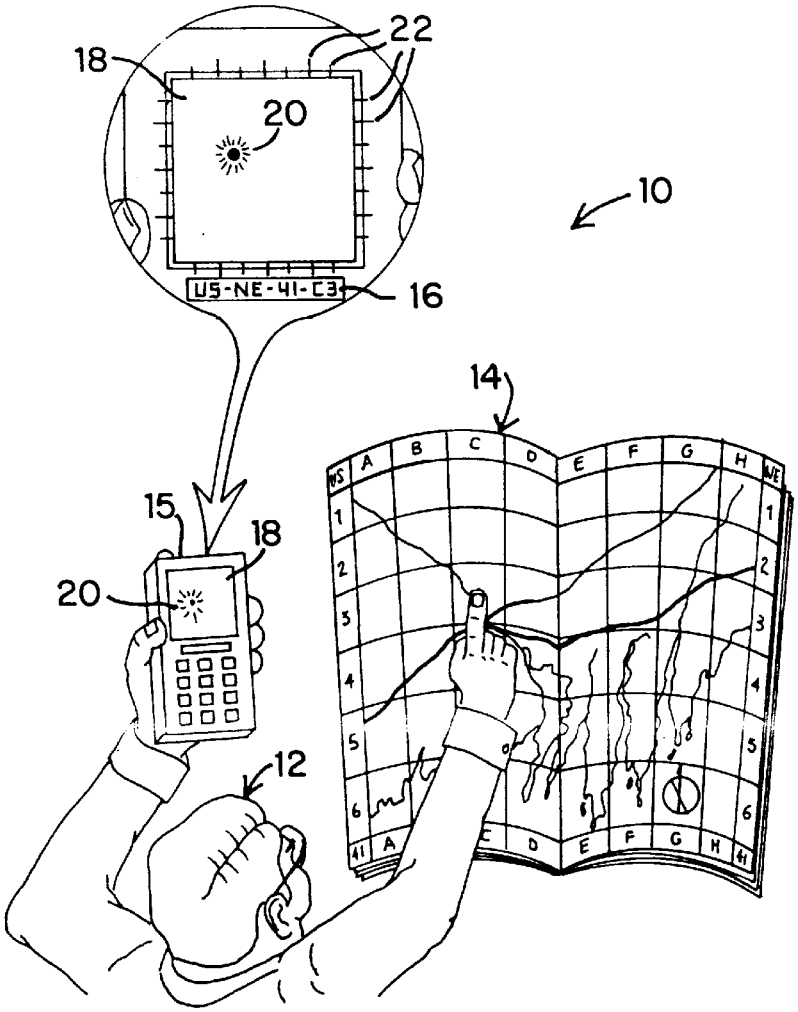

FIG 1

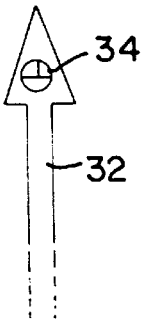

FIG 1D

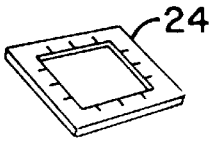

FIG 1A

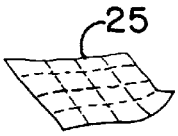

FIG 1B

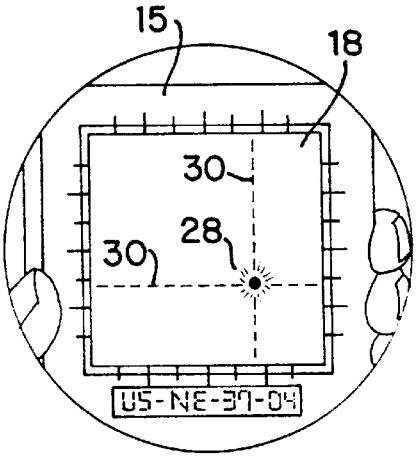

FIG 1C