US008245673B2

(12) **United States Patent**
Howell-Smith

(10) **Patent No.: US 8,245,673 B2**
(45) **Date of Patent: Aug. 21, 2012**

(54) **OPPOSED PISTON COMBUSTION ENGINE**

(75) Inventor: **Bradley Howell-Smith**, Queensland (AU)

(73) Assignee: **Revetec Holdings Limited**, Southport, Queensland (AU)

(*) Notice: Subject to any disclaimer, the term of this patent is extended or adjusted under 35 U.S.C. 154(b) by 392 days.

(21) Appl. No.: **12/440,338**

(22) PCT Filed: **Sep. 7, 2007**

(86) PCT No.: **PCT/AU2007/001331**

§ 371 (c)(1),
(2), (4) Date: **May 12, 2009**

(87) PCT Pub. No.: **WO2008/028252**

PCT Pub. Date: **Mar. 13, 2008**

(65) **Prior Publication Data**

US 2009/0314232 A1 Dec. 24, 2009

(30) **Foreign Application Priority Data**

Sep. 7, 2006 (AU) 2006904920

(51) **Int. Cl.**
F02B 75/22 (2006.01)
F02B 75/32 (2006.01)

(52) **U.S. Cl.** **123/55.3**; 123/55.2; 123/55.4; 123/53.3; 123/53.4; 123/197.1

(58) **Field of Classification Search** 123/53.3, 123/53.4, 55.2, 55.3, 55.4, 197.1
See application file for complete search history.

(56) **References Cited**

U.S. PATENT DOCUMENTS

793,270	A *	6/1905	Blomgren	123/54.3
1,830,046	A *	11/1931	White	123/54.3
3,584,610	A *	6/1971	Porter	123/54.3
3,948,230	A *	4/1976	Burns	123/54.3
4,848,282	A	7/1989	Chaneac	
5,606,938	A *	3/1997	Rowe	123/54.3
5,634,441	A *	6/1997	Ragain	123/54.3
5,992,356	A *	11/1999	Howell-Smith	123/55.3
6,692,394	B2 *	2/2004	Takenaka	475/5
6,769,384	B2 *	8/2004	Dougherty	123/54.1

FOREIGN PATENT DOCUMENTS

FR	2307132	11/1976
WO	WO 97/04225	2/1997

* cited by examiner

Primary Examiner — Noah Kamen
Assistant Examiner — Grant Moubry
(74) *Attorney, Agent, or Firm* — David W. Carstens; Jeffrey G. Degenfelder; Carstens & Cahoon, LLP

(57) **ABSTRACT**

An engine comprising: a shaft (**6**) having a first multilobate cam (**5***a*) axially fixed to said shaft (**6**) and an adjacent second multilobate cam (**5***b*) differentially geared to said first multilobate and a pair of diametrically opposed pistons (**1***a*, **1***b*) which pistons of a pair of pistons are rigidly interconnected by a connecting plate (**4**) and wherein, reciprocating motion of said pistons imparts rotary motion to said shaft via contact between said pistons and the camming surfaces of said multilobate cams.
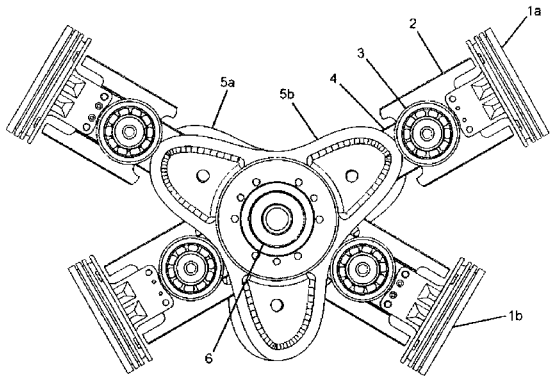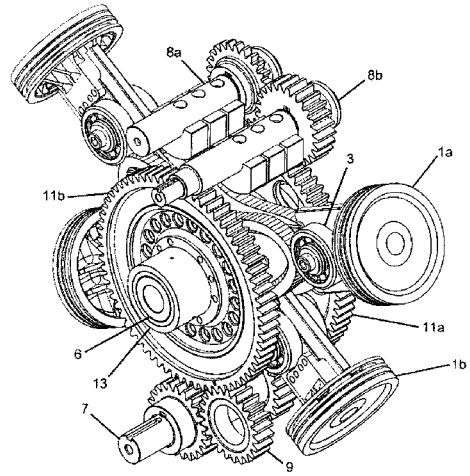
22 Claims, 3 Drawing Sheets