July 20, 1948. K. A. KAIL 2,445,673

MAGNETIC COMPASS INDICATING SYSTEM FOR AVIATION TRAINERS

Filed July 30, 1943 4 Sheets-Sheet 1

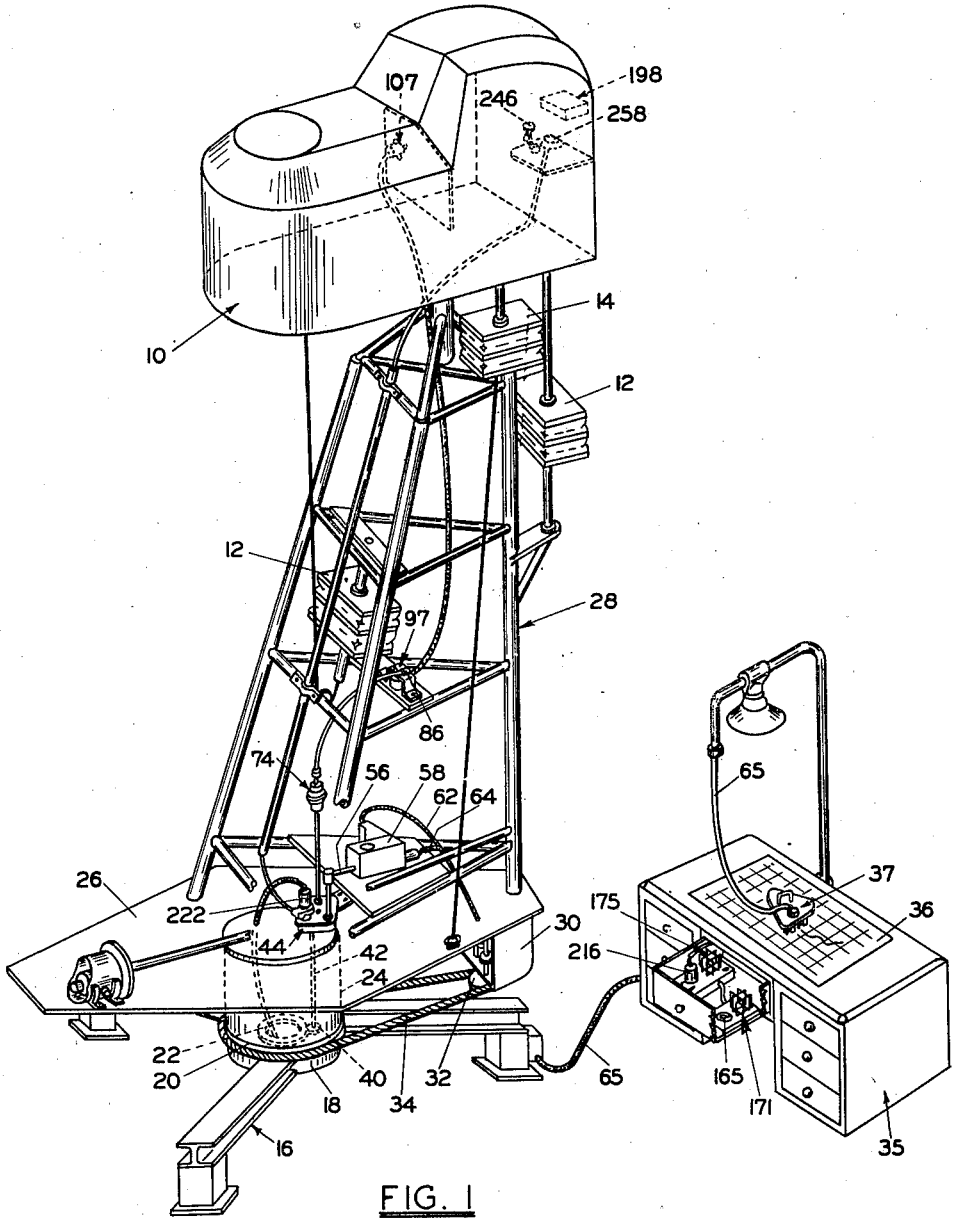

FIG. 1

KARL A. KAIL
INVENTOR.

BY Donald T. Hellier
Philip S. Hopkins

ATTORNEYS.