March 4, 1941. W. E. BURNHAM 2,234,073

PROPELLER

Filed Dec. 15, 1937

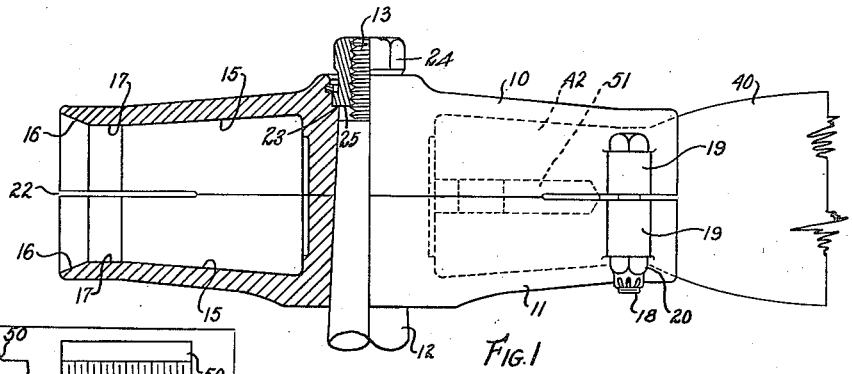


FIG. 1

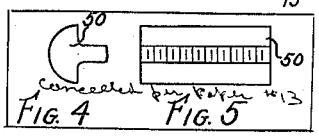


FIG. 4 FIG. 5

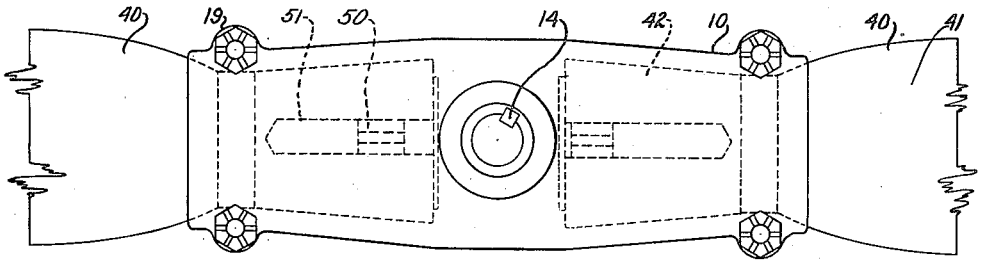


FIG. 2

INVENTOR.
Walter E. Burnham

BY Frank Zugelter
ATTORNEY.