March 4, 1952 W. L. WHITSON 2,587,672

AUTOMATIC REVOLVING CHAMBER ROCKET LAUNCHER

Filed Aug. 18, 1945 2 SHEETS—SHEET 1

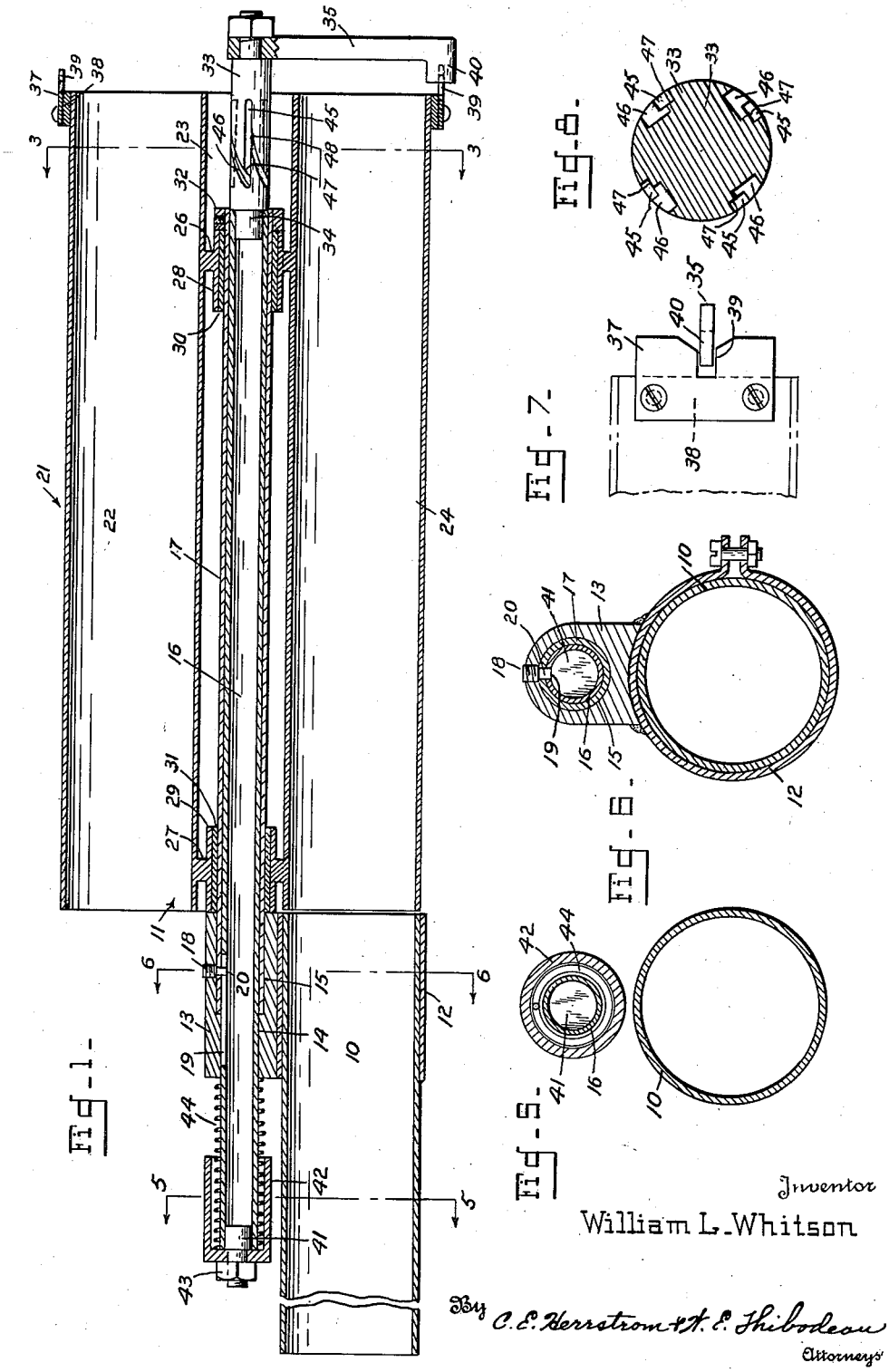

Fig. 1.

Fig. 8.

Fig. 7.

Fig. 6.

Fig. 5.

Inventor
William L. Whitson

By C. E. Herrstrom & H. E. Thibodeau
Attorneys