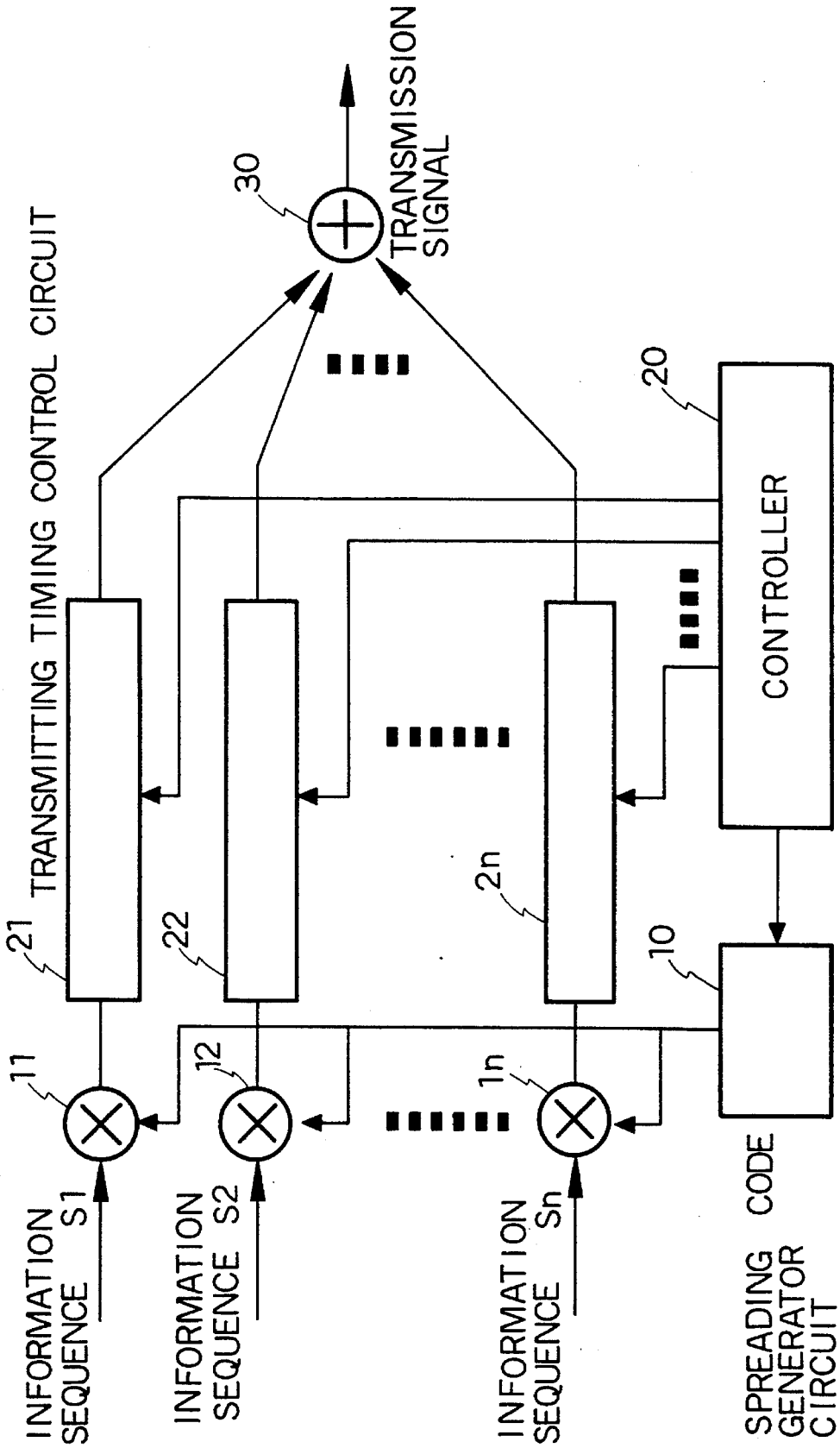
TRANSMITTING TIMING CONTROL CIRCUIT
30
TRANSMISSION SIGNAL
20
CONTROLLER
21
22
2n
10
11
12
1n
INFORMATION SEQUENCE S1
INFORMATION SEQUENCE S2
INFORMATION SEQUENCE Sn
SPREADING CODE GENERATOR CIRCUIT

FIG. 1