(No Model.)

C. M. HOWARD.

WATCH REGULATOR.

No. 314,672. Patented Mar. 31, 1885.

Fig. 1.

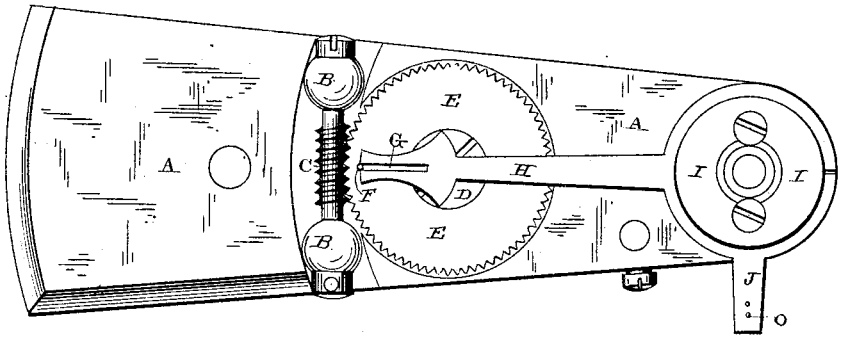

Fig. 2.

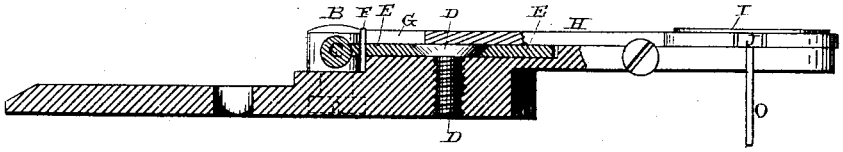

Witnesses.
Louis F. Gardner
A. S. Pattison

Inventor.
C. M. Howard,
per
F. A. Lehmann,
Atty

N. PETERS, Photo-Lithographer, Washington, D. C.