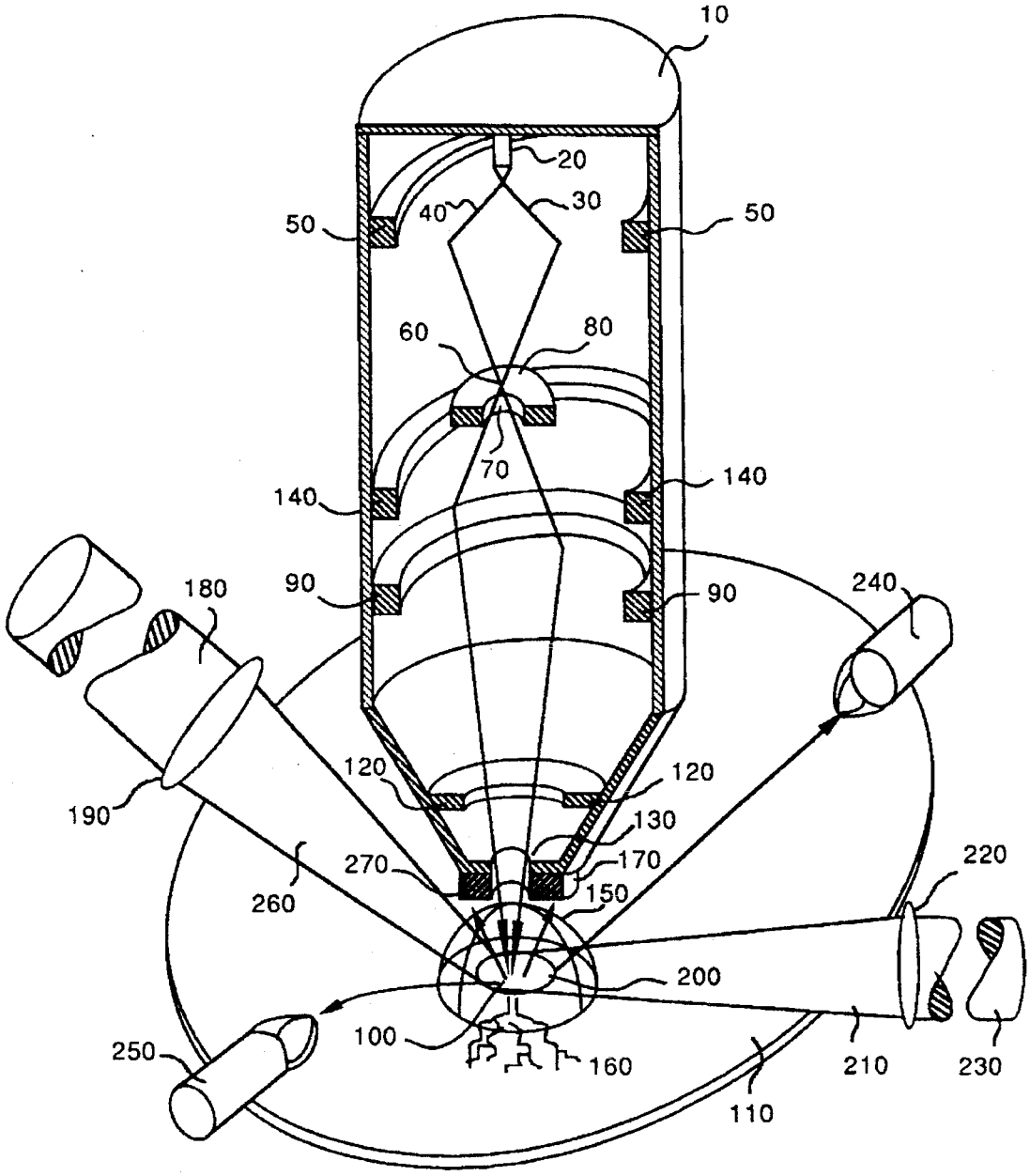

FIG 1 -- Prior Art