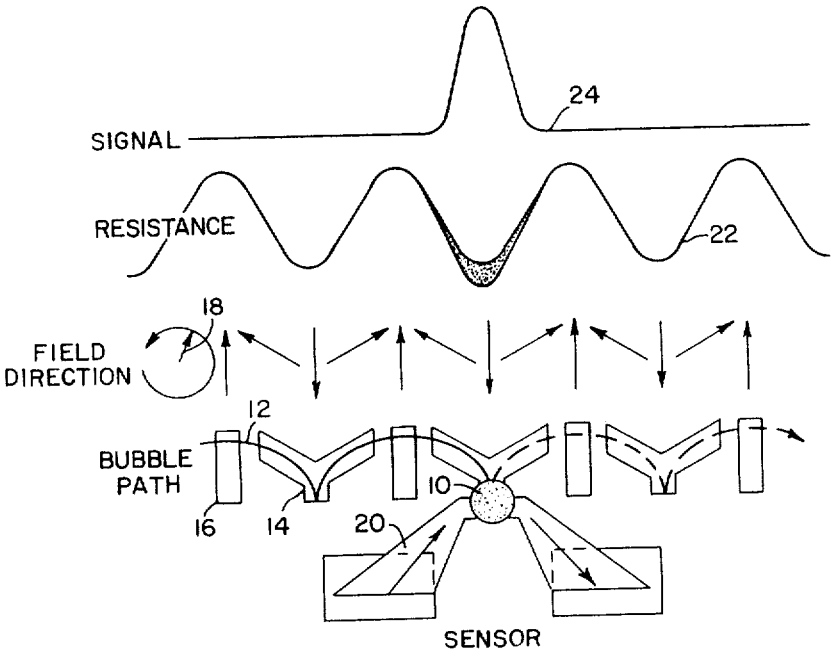

Fig. 1. (Prior Art)

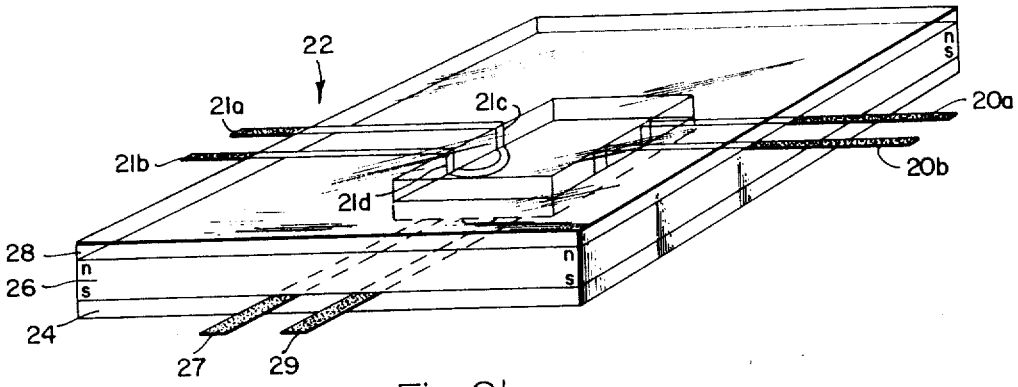

Fig. 2b.