J. D. PEDERSEN.

FIREARM.

APPLICATION FILED SEPT. 30, 1908.

963,171. Patented July 5, 1910.

7 SHEETS—SHEET 1.

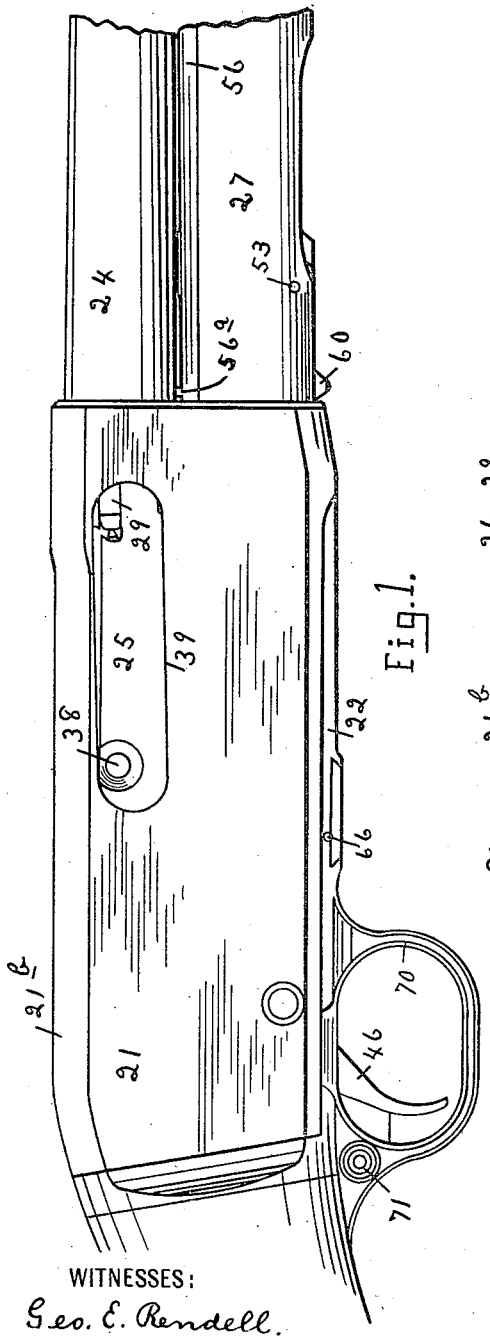

Fig. 1.

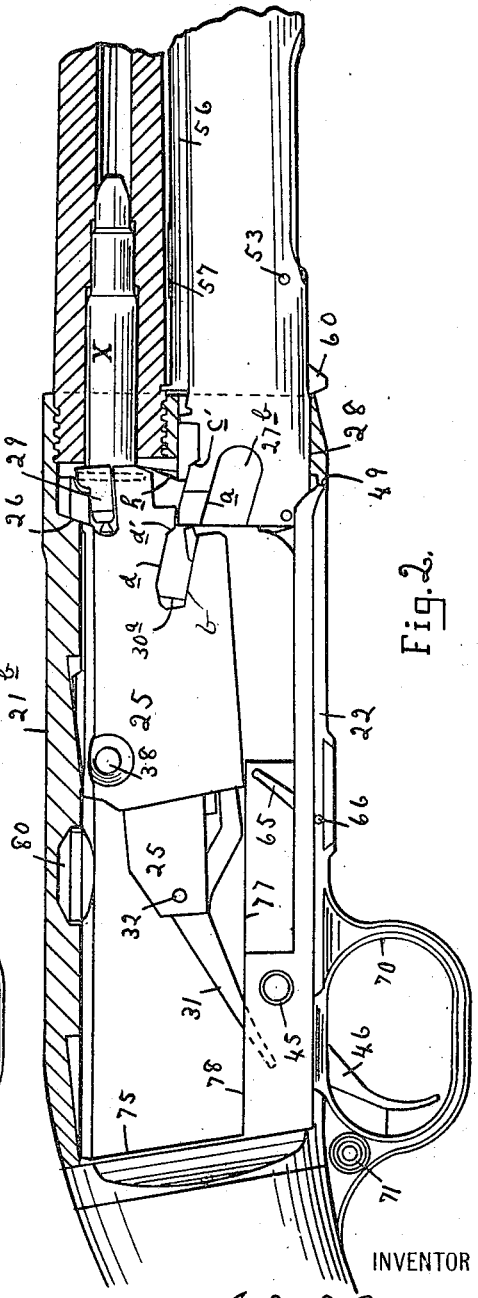

Fig. 2.

WITNESSES:

Geo. E. Rendell.

E. S. Hesser

INVENTOR

John D. Pedersen

By Robinson, Martin & Jones

ATTORNEYS