US009464670B2

(12) **United States Patent**
Post

(10) **Patent No.: US 9,464,670 B2**
(45) **Date of Patent: Oct. 11, 2016**

(54) **ELECTROSTATIC STABILIZER FOR A PASSIVE MAGNETIC BEARING SYSTEM**

(71) Applicant: **Lawrence Livermore National Security, LLC**, Livermore, CA (US)

(72) Inventor: **Richard F Post**, Walnut Creek, CA (US)

(73) Assignee: **Lawrence Livermore National Security, LLC**, Livermore, CA (US)

(*) Notice: Subject to any disclaimer, the term of this patent is extended or adjusted under 35 U.S.C. 154(b) by 0 days.

(21) Appl. No.: **14/928,729**

(22) Filed: **Oct. 30, 2015**

(65) **Prior Publication Data**

US 2016/0084315 A1 Mar. 24, 2016

Related U.S. Application Data

(62) Division of application No. 13/827,245, filed on Mar. 14, 2013, now Pat. No. 9,197,110.

(51) **Int. Cl.**

H02K 7/09	(2006.01)
F16C 39/00	(2006.01)
F16C 32/04	(2006.01)

(52) **U.S. Cl.**

CPC ***F16C 39/00*** (2013.01); ***F16C 32/0404*** (2013.01); ***F16C 32/0408*** (2013.01); ***F16C 32/0425*** (2013.01); ***H02K 7/09*** (2013.01)

(58) **Field of Classification Search**

CPC .. H02K 7/09; F16C 32/0425; F16C 32/0444

USPC 310/90.5

See application file for complete search history.

(56) **References Cited**

U.S. PATENT DOCUMENTS

4,562,430	A	12/1985	Robinson	
5,495,221	A	2/1996	Post	
5,847,480	A	12/1998	Post	
6,191,515	B1	2/2001	Post	
6,515,387	B1 *	2/2003	Shinozaki	F16C 32/0451 310/90.5
6,570,286	B1	5/2003	Gabrys	
7,052,253	B2 *	5/2006	Izraelev	A61M 1/101 310/90.5
7,876,010	B2	1/2011	Post	
2004/0174079	A1	9/2004	Izraelev	
2006/0162452	A1	7/2006	Moser et al.	
2006/0279149	A1 *	12/2006	Asper	H02K 7/09 310/90.5
2008/0252162	A1	10/2008	Post	
2011/0248587	A1 *	10/2011	Sohn	F16C 39/02 310/90.5
2011/0291507	A1	12/2011	Post	
2012/0098371	A1	4/2012	Pinneo et al.	
2012/0175985	A1	7/2012	Post	

OTHER PUBLICATIONS

International Search Report and Written Opinion for PCT/US2014/025417 corresponding to U.S. Appl. No. 13/827,245, 11 pages.

* cited by examiner

Primary Examiner — Hanh Nguyen
(74) *Attorney, Agent, or Firm* — John P. Wooldridge

(57) **ABSTRACT**

Electrostatic stabilizers are provided for passive bearing systems composed of annular magnets having a net positive stiffness against radial displacements and that have a negative stiffness for vertical displacements, resulting in a vertical instability. Further embodiments are shown of a radial electrostatic stabilizer geometry (using circuitry similar to that employed in the vertical stabilizer). This version is suitable for stabilizing radial (lateral) displacements of a rotor that is levitated by annular permanent magnets that are stable against vertical displacements but are unstable against radial displacements.
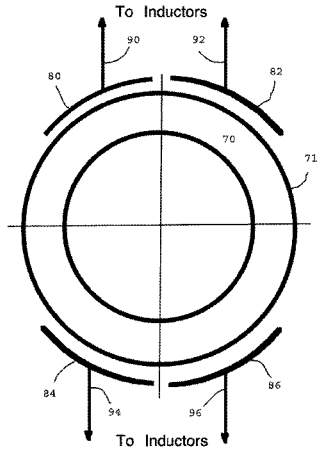
9 Claims, 6 Drawing Sheets