SENSORAMA SIMULATOR

Filed Jan. 10, 1961 8 Sheets-Sheet 3

Fig. 5.

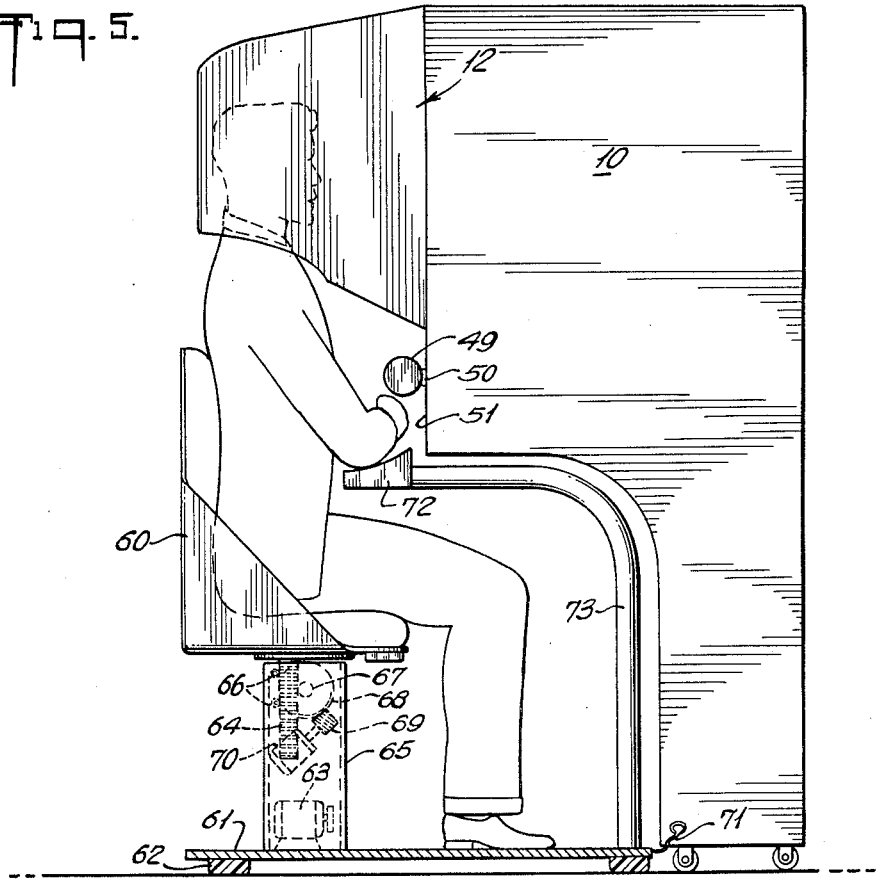

Fig. 6.

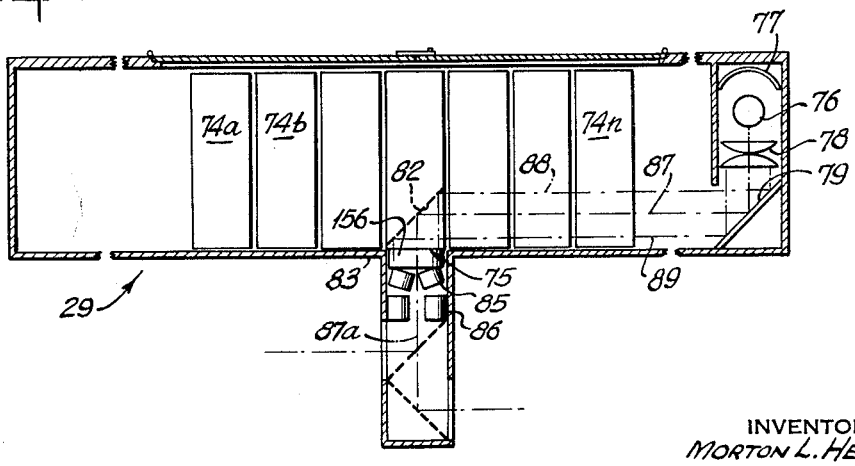

INVENTOR
MORTON L. HEILIG
BY
Douglas M. Clarkson
ATTORNEY