SENSORAMA SIMULATOR

Filed Jan. 10, 1961 8 Sheets-Sheet 1

Fig. 1.

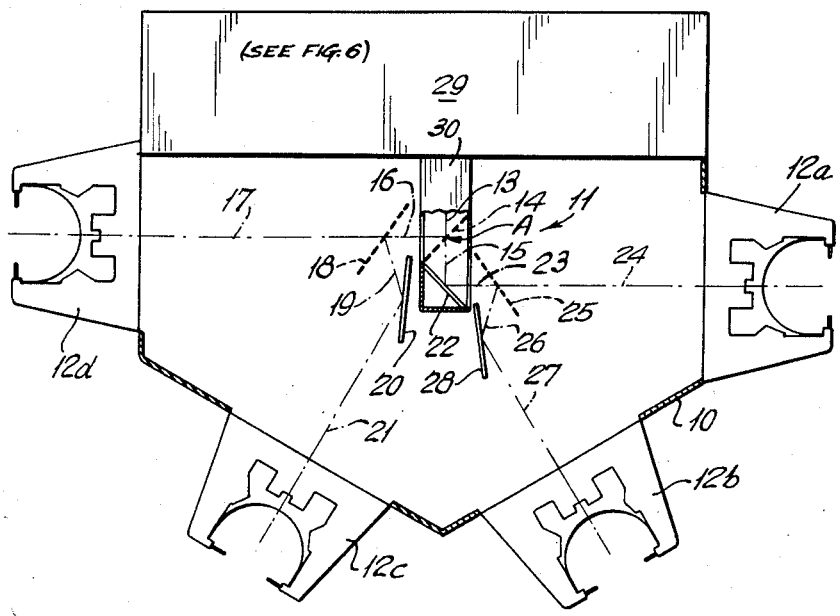

Fig. 2.

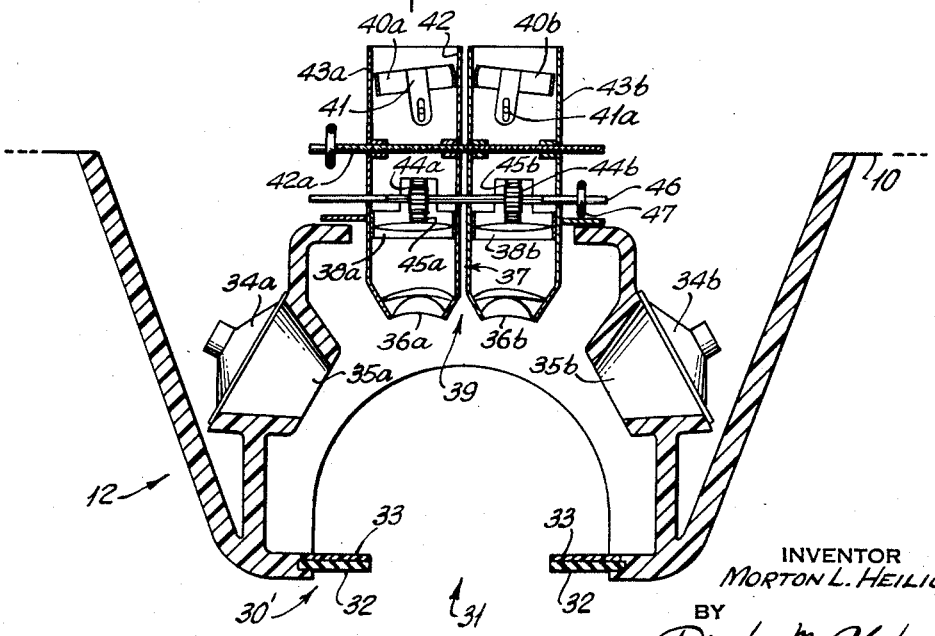

INVENTOR
MORTON L. HEILIG
BY
Douglas M. Clarkson
ATTORNEY