J. A. WILLIAMS.

SPRING HANGER.

APPLICATION FILED DEC. 15, 1913.

**1,230,970.** Patented June 26, 1917.

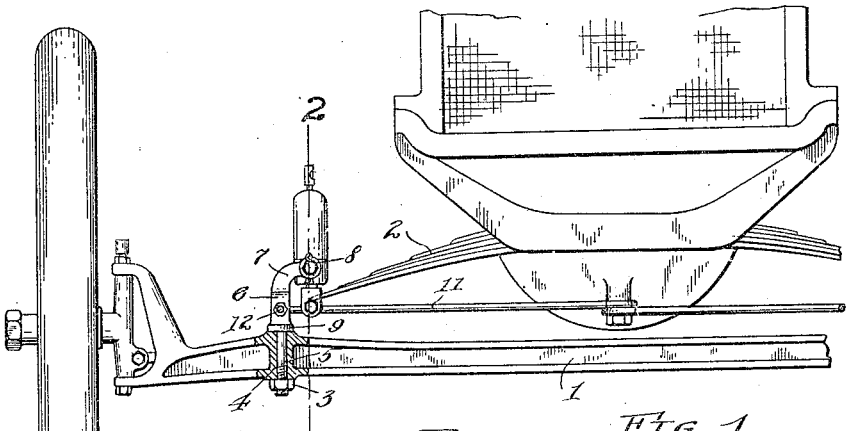


FIG. 1.

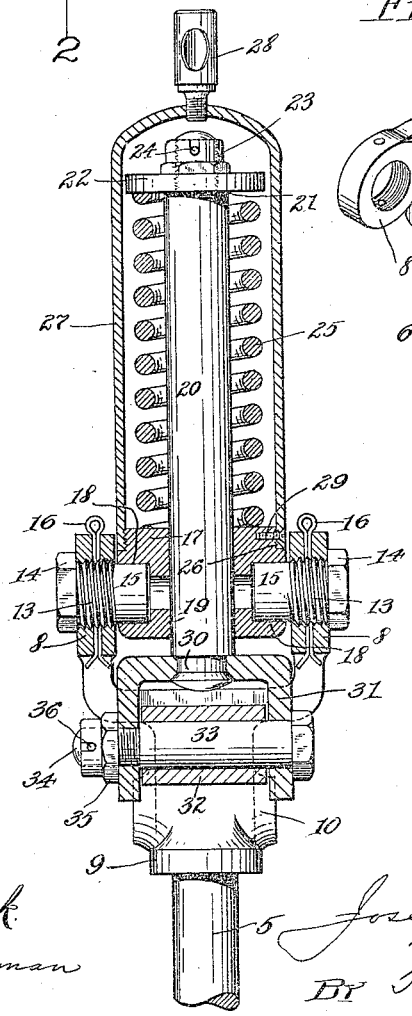


FIG. 2.

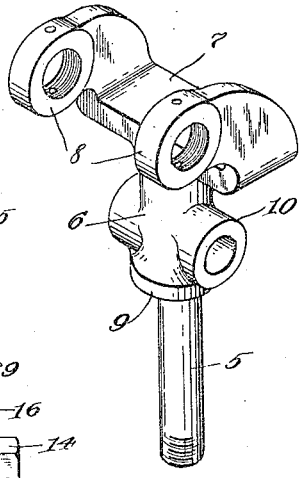


FIG. 3.

WITNESSES:
Robert L. Bruck.
Irene L. Stohlman

INVENTOR,
Joseph A. Williams,
BY Hull & Smith,
ATTYS.

THE NORRIS PETERS CO., PHOTO-LITHO., WASHINGTON, D. C.