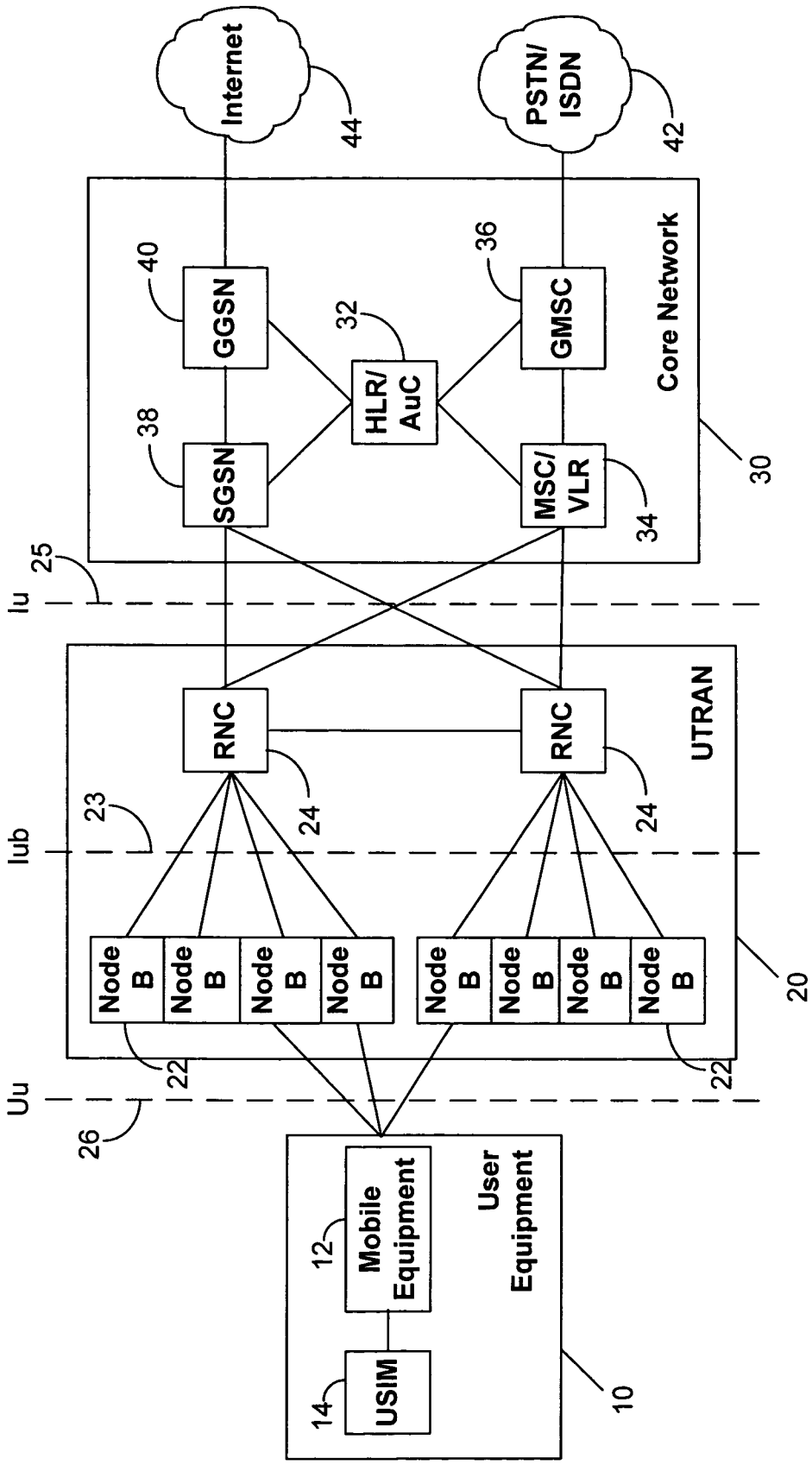
Internet
44
PSTN/
ISDN
42
40
GGSN
38
SGSN
32
HLR/
AuC
36
GMSC
MSC/
VLR
34
Core Network
30
25
Iu
RNC
24
RNC
24
UTRAN
23
Iub
Node
B
22
20
Uu
26
User
Equipment
12
Mobile
Equipment
14
USIM
10

FIG. 1