Nov. 25, 1930. E. G. HOWARD 1,782,569

ATHLETIC SHOE AND CLEAT THEREFOR

Filed March 1, 1929

Fig. 1

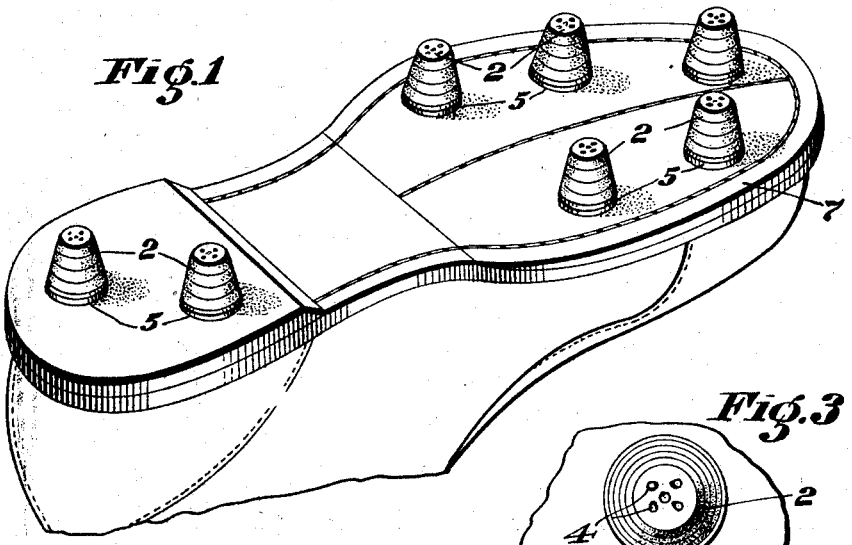

Fig. 3

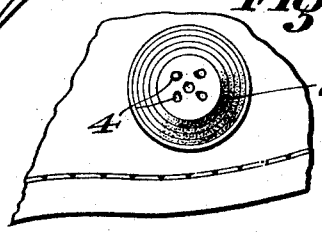

Fig. 2

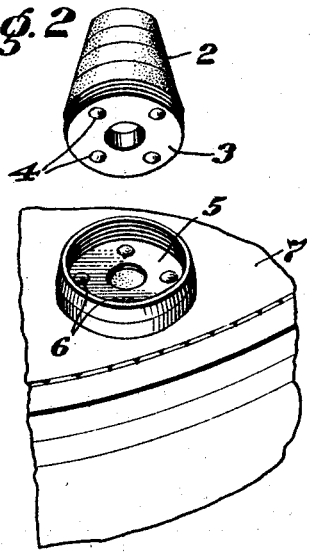

Fig. 4

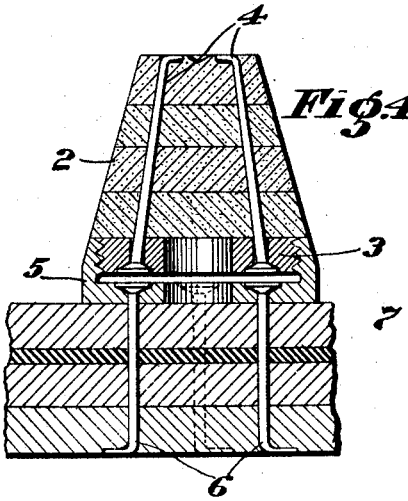

INVENTOR
Emory G. Howard,
BY
J. L. McCready,
his ATTORNEY.