July 10, 1945. C. I. BAKER 2,379,869

DIRECTIONAL COMPASS FOR AIRCRAFT TRAINERS

Filed Aug. 6, 1943

FIG. 1

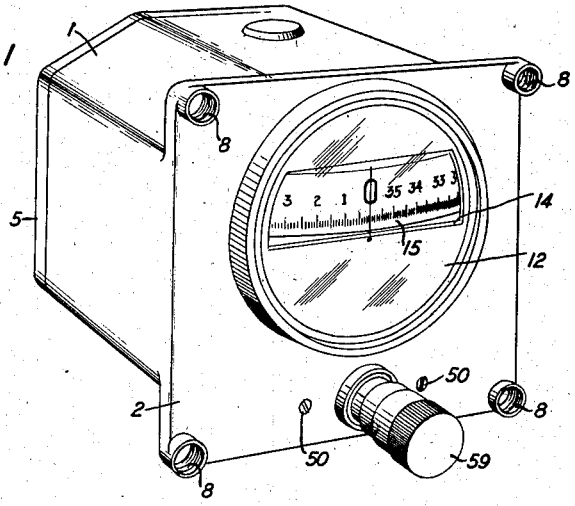

FIG. 4

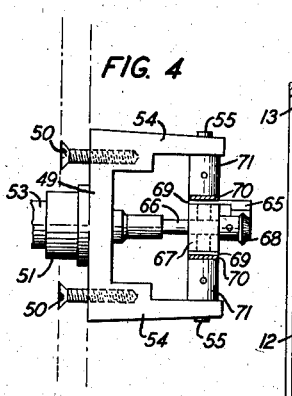

FIG. 2

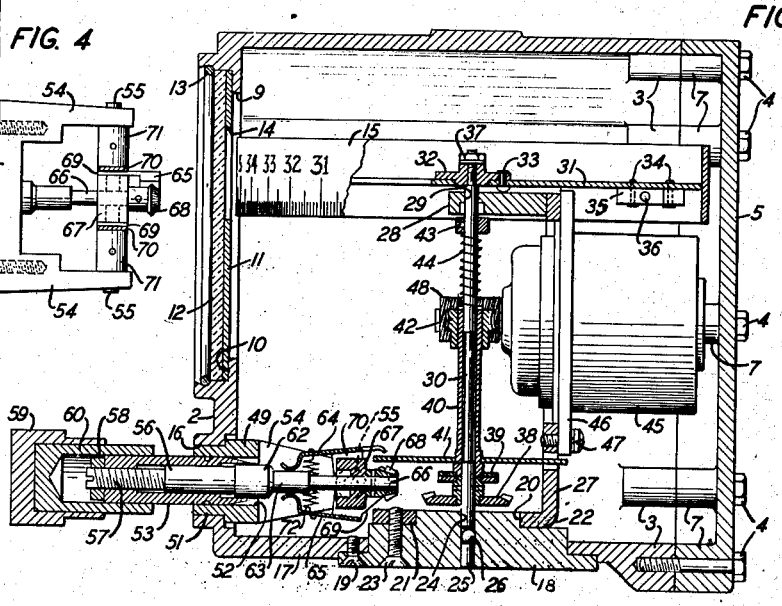

FIG. 3

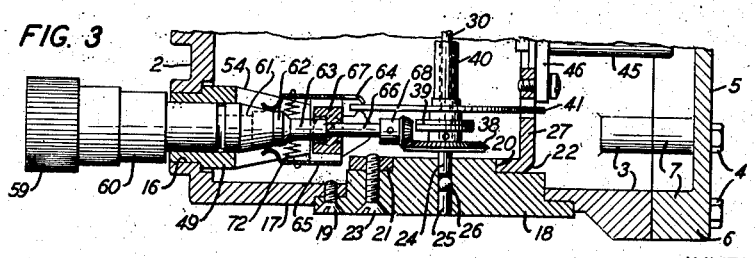

INVENTOR
C. I. BAKER

BY P. C. Smith

ATTORNEY