US009065169B2

(12) **United States Patent**
Chamberlin

(10) **Patent No.: US 9,065,169 B2**
(45) **Date of Patent: Jun. 23, 2015**

(54) **HIGH FREQUENCY MAGNETIC FIELD ANTENNA**

(71) Applicant: **University of New Hampshire**, Durham, NH (US)

(72) Inventor: **Kent A. Chamberlin**, Durham, NH (US)

(73) Assignee: **University of New Hampshire**, Durham, NH (US)

(*) Notice: Subject to any disclaimer, the term of this patent is extended or adjusted under 35 U.S.C. 154(b) by 81 days.

(21) Appl. No.: **13/926,161**

(22) Filed: **Jun. 25, 2013**

(65) **Prior Publication Data**

US 2014/0378080 A1 Dec. 25, 2014

(51) **Int. Cl.**

H04B 1/16	(2006.01)
H01Q 7/06	(2006.01)
H04B 1/06	(2006.01)

(52) **U.S. Cl.**
CPC ... ***H01Q 7/06*** (2013.01); ***H04B 1/06*** (2013.01)

(58) **Field of Classification Search**
USPC 343/702, 718, 748; 455/63.4, 269
See application file for complete search history.

(56) **References Cited**

U.S. PATENT DOCUMENTS

3,736,591	A *	5/1973	Rennels et al.	343/702
3,778,836	A	12/1973	Tanaka	
3,823,403	A *	7/1974	Walter et al.	343/708
4,940,992	A *	7/1990	Nguyen et al.	343/803
6,215,455	B1	4/2001	D'Angelo et al.	
6,622,007	B2	9/2003	Linden	
6,731,246	B2	5/2004	Parsche et al.	
7,053,857	B2	5/2006	Noro et al.	
7,242,359	B2 *	7/2007	Turner et al.	343/742
7,737,905	B1 *	6/2010	Meloling et al.	343/788
7,969,373	B2	6/2011	Tsilioukas et al.	
8,436,780	B2	5/2013	Schantz et al.	
8,736,500	B1 *	5/2014	Lam	343/726
8,860,618	B2 *	10/2014	Gertenbach et al.	343/745
2003/0227572	A1	12/2003	Rowser et al.	
2006/0038731	A1 *	2/2006	Turner et al.	343/742
2007/0024516	A1 *	2/2007	Araki et al.	343/788
2009/0121949	A1	5/2009	Washiro	
2009/0254961	A1	10/2009	Aue	
2009/0322634	A1	12/2009	Yun et al.	
2011/0128199	A1	6/2011	He et al.	
2012/0169553	A1	7/2012	Nomura et al.	
2012/0229354	A1	9/2012	Ishikura et al.	
2013/0176094	A1 *	7/2013	Hong et al.	336/107

OTHER PUBLICATIONS

Chamberlin, K. and McMahon, B., Datacasting in the Mobile Environment, Journal of Networks, Jul. 2008, pp. 49-55, vol. 3, No. 7, Academy Publisher, Tortola, British Virgin Islands.

(Continued)

Primary Examiner — Blane J Jackson
(74) *Attorney, Agent, or Firm* — Lizotte Law Office, PLLC; Donna L. Lizotte

(57) **ABSTRACT**

An antenna system including a loop antenna including a conductor; and a magnetic gain element positioned in an aperture defined by the loop antenna, the magnetic gain element including a magnetic material that has a relative permeability greater than one for an operating frequency range, the magnetic gain element configured to increase a magnetic flux density associated with a received magnetic-field component of an incident electromagnetic wave wherein a loop output voltage induced in the loop antenna is based, at least in part, on the increased magnetic flux density.
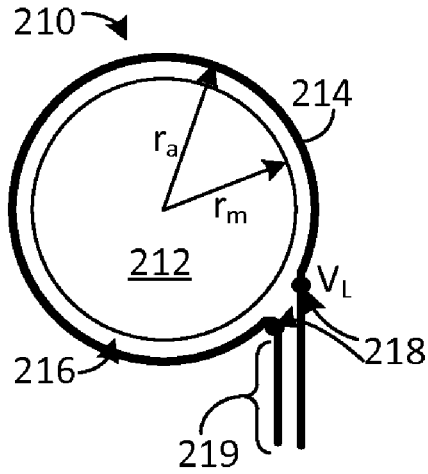
14 Claims, 3 Drawing Sheets