US010507769B1

(12) **United States Patent**
Glickman et al.

(10) **Patent No.: US 10,507,769 B1**
(45) **Date of Patent: Dec. 17, 2019**

(54) **VEHICLE WITH FRONT TRUNK**

(71) Applicant: **FORD GLOBAL TECHNOLOGIES, LLC**, Dearborn, MI (US)

(72) Inventors: **David Brian Glickman**, Southfield, MI (US); **Stuart C. Salter**, White Lake, MI (US); **Paul Kenneth Dellock**, Northville, MI (US); **Mark A. Wisneski**, Dearborn, MI (US)

(73) Assignee: **FORD GLOBAL TECHNOLOGIES, LLC**, Dearborn, MI (US)

(*) Notice: Subject to any disclaimer, the term of this patent is extended or adjusted under 35 U.S.C. 154(b) by 0 days.

(21) Appl. No.: **16/173,188**

(22) Filed: **Oct. 29, 2018**

(51) **Int. Cl.**

B60R 5/02	(2006.01)
B60R 9/06	(2006.01)
B60Q 3/74	(2017.01)
B60Q 3/30	(2017.01)

(52) **U.S. Cl.**
CPC ***B60R 9/065*** (2013.01); ***B60Q 3/30*** (2017.02); ***B60Q 3/74*** (2017.02)

(58) **Field of Classification Search**
CPC B60R 11/06; B60R 9/065; B60R 5/041; B60R 9/06; B60R 19/14; B60R 2011/0082; B60R 2011/0084; B60R 2011/0085; B60Q 3/30
USPC 224/496, 489, 491, 502, 509, 281–282; 362/459, 464, 484, 523; 296/26.09
See application file for complete search history.

(56) **References Cited**

U.S. PATENT DOCUMENTS

2,576,385	A *	11/1951	Bigsby	B60R 5/041 224/496
2,784,027	A *	3/1957	Temp	B60P 3/32 296/156
4,375,306	A *	3/1983	Linder	B60P 3/32 108/44
4,469,364	A *	9/1984	Rafi-Zadeh	B60R 11/06 224/404
4,705,315	A *	11/1987	Cherry	B60R 11/06 296/24.45
8,562,058	B1	10/2013	Kim et al.	
8,844,779	B2 *	9/2014	Cha	B60R 3/02 224/491
8,925,777	B1 *	1/2015	Casucci	B60R 9/065 224/404
9,789,823	B2 *	10/2017	Salter	B60R 7/02
9,863,621	B2 *	1/2018	Dai	B62D 25/12
2009/0021357	A1	1/2009	Evans et al.	
2011/0031771	A1 *	2/2011	Ding	B60R 5/02 296/24.4

FOREIGN PATENT DOCUMENTS

CN	202557425	U	11/2012
CN	104586097	A	5/2015
CN	102910111	B	12/2015

(Continued)

Primary Examiner — Adam J Waggenspack
(74) *Attorney, Agent, or Firm* — Vichit Chea; MacMillan, Sobanski & Todd, LLC

(57) **ABSTRACT**

A vehicle includes a front trunk between fenders, a grille movable to provide an opening to the front trunk, and front and rear bins, slidable out of the front trunk to allow the front bin to pivot on the rear bin. A light is mounted on the front bin such that light projects into the front and rear bins when adjacent and only into the front bin when the front bin is pivoted away.
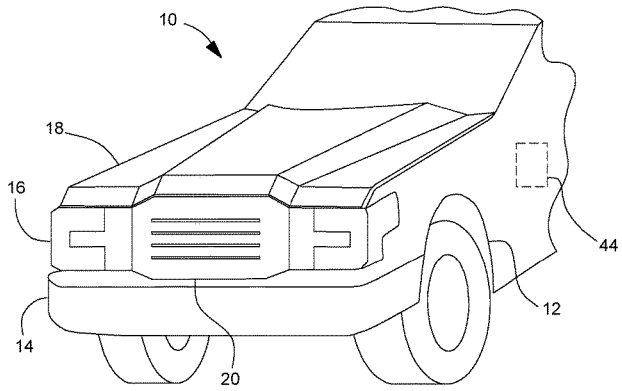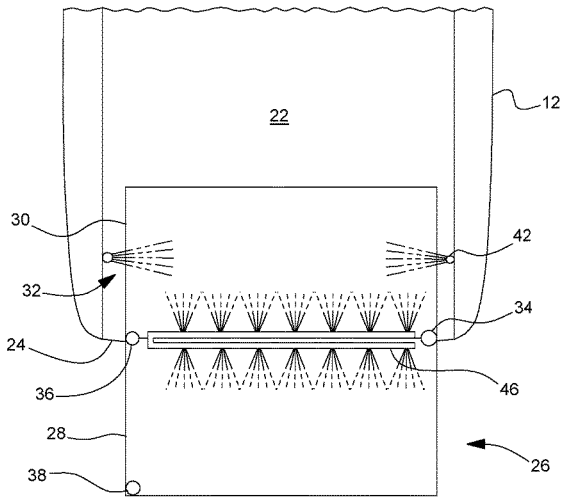
15 Claims, 4 Drawing Sheets