US006264668B1

(12) **United States Patent**
Prywes

(10) **Patent No.: US 6,264,668 B1**
(45) **Date of Patent: Jul. 24, 2001**

(54) **OPHTHALMOLOGIC INSTRUMENT FOR PRODUCING A FISTULA IN THE SCLERA**

(76) Inventor: **Arnold S. Prywes**, 4212 Hempstead Turnpike, Bethpage, NY (US) 11714

(*) Notice: Subject to any disclaimer, the term of this patent is extended or adjusted under 35 U.S.C. 154(b) by 0 days.

(21) Appl. No.: **09/154,394**

(22) Filed: **Sep. 16, 1998**

(51) **Int. Cl.**[7] **A61B 17/32**

(52) **U.S. Cl.** **606/167**; 606/166; 606/184; 606/4; 600/567

(58) **Field of Search** 606/166–167, 606/15, 107, 183–186, 4, 5, 6; 30/304, 299, 279.2, 305; 604/9.22; 128/305; 600/567, 564

(56) **References Cited**

U.S. PATENT DOCUMENTS

3,007,471 * 11/1961 McClure, Jr. 600/567
4,578,865 * 4/1986 Keller 30/304
4,649,919 * 3/1987 Thimsen et al. 604/22
4,651,752 * 3/1987 Fuerst 600/567
4,696,298 * 9/1987 Higgins et al. 128/305
5,047,008 * 9/1991 De Juan, Jr. et al. 604/22
5,201,747 * 4/1993 Mastel 606/167
5,222,959 * 6/1993 Anis 606/107
5,224,950 7/1993 Prywes .
5,478,338 * 12/1995 Reynard 606/15
5,487,747 * 1/1996 Stagmann et al. 606/166
5,549,622 * 8/1996 Ingram 606/167
5,571,127 * 11/1996 DeCampli 606/167
5,628,760 * 5/1997 Knoepfler 606/167
5,741,245 * 4/1998 Cozean et al. 606/5
5,752,967 * 5/1998 Kritzinger et al. 606/167
5,788,667 * 8/1998 Stoller 606/167
5,797,937 * 8/1998 Ichikawa et al. 606/167
5,817,115 * 10/1998 Nigam 606/167
6,007,511 * 12/1999 Prywes 604/9

* cited by examiner

Primary Examiner—Michael H. Thaler
Assistant Examiner—Julian W. Woo
(74) *Attorney, Agent, or Firm*—Ladas & Parry

(57) **ABSTRACT**

An instrument for producing a fistula through a tissue wall of an eye of a patient. The instrument has a housing with a flat blade supported in the housing for penetrating through the tissue wall to form an incised slit in the wall forming a tunnel therein. By rotating the housing and the flat blade a lamellar flap can be formed at the top of the tunnel. The housing contains a second cutting device to remove a large portion of tissue material at the bottom of the tunnel producing an aperture joined to the slit for forming the fistula. The cutting device can be a curved blade having a scoop-shaped cross-section, a punch or an optical fiber capable of transmitting a laser beam. The cutting device is operated while the flat blade remains in the tunnel.
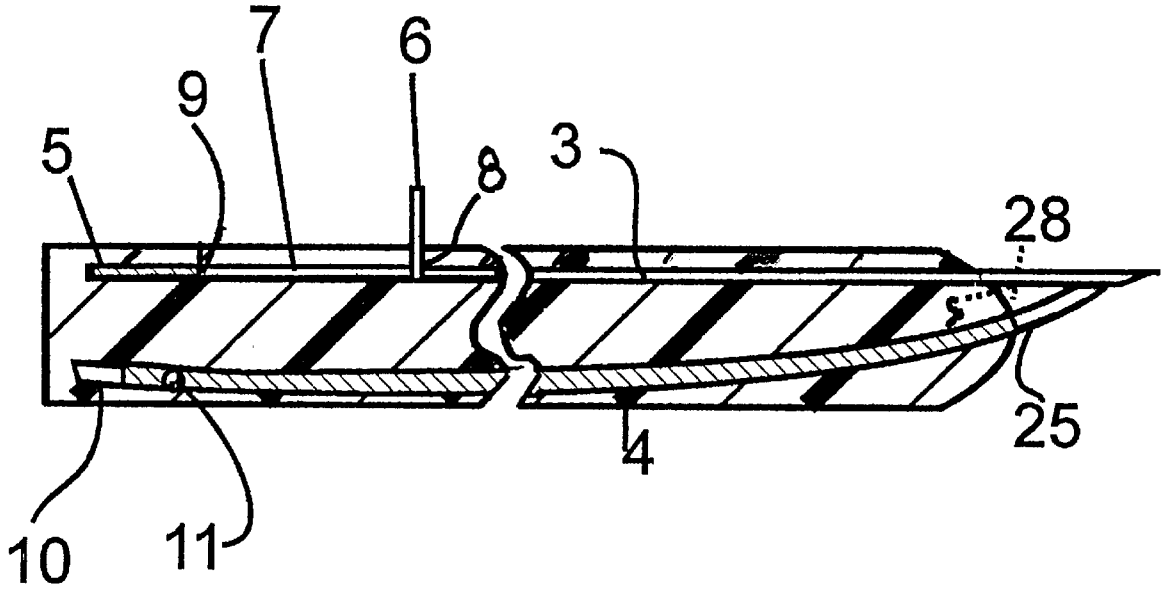
19 Claims, 28 Drawing Sheets