US005742668A

United States Patent [19]

Pepe et al.

[11] **Patent Number: 5,742,668**

[45] **Date of Patent: Apr. 21, 1998**

[54] **ELECTRONIC MASSAGING NETWORK**

[75] Inventors: **David Matthew Pepe**, Middletown; **Lisa B. Blitzer**, Manalapan; **James Joseph Brockman**, Perrineville; **William Cruz**, Eatontown; **Dwight Omar Hakim**, Matawan, all of N.J.; **Michael Kramer**, Bronx County, N.Y.; **Dawn Diane Petr**, Basking Ridge, N.J.; **Josefa Ramaroson**, Freehold, N.J.; **Gerardo Ramirez**, Bridgewater, N.J.; **Yang-Wei Wang**, Howell, N.J.; **Robert G. White**, Morristown, N.J.

[73] Assignee: **Bell Communications Research, Inc.**, Morristown, N.J.

[21] Appl. No.: **466,623**

[22] Filed: **Jun. 6, 1995**

Related U.S. Application Data

[63] Continuation of Ser. No. 309,336, Sep. 14, 1994.

[51] **Int. Cl.**[6] **H04M 11/00**; H04M 1/64

[52] **U.S. Cl.** **379/58**; 379/67; 379/57

[58] **Field of Search** 379/58, 59, 60, 379/57, 93, 67; 370/58.1, 110.1

[56] **References Cited**

U.S. PATENT DOCUMENTS

5,008,926	4/1991	Misholi	379/89
5,168,271	12/1992	Hoff	379/60 X
5,311,576	5/1994	Brunson et al.	379/89
5,325,419	6/1994	Connolly et al.	379/60
5,329,579	7/1994	Brunson	379/88
5,351,235	9/1994	Lahtinen	370/58.1
5,384,831	1/1995	Cresswell	379/67
5,418,835	5/1995	Frohman et al.	379/57
5,420,911	5/1995	Dahlin et al.	379/59
5,452,289	9/1995	Sharma et al.	370/32.1
5,479,411	12/1995	Klein	370/110.1
5,604,788	2/1997	Tett	379/58

Primary Examiner—Dwayne Bost
Assistant Examiner—Scott Richardson
Attorney, Agent, or Firm—Loria B. Yeadon; Joseph Giordano

[57] **ABSTRACT**

A personal communications internetwork provides a personal communications internetwork providing a network subscriber with the ability to remotely control the receipt and delivery of wireless and wireline electronic text messages. The network operates as an interface between wireless and wireline networks. The subscriber's message receipt and delivery options are maintained in a database which the subscriber may access by wireless or wireline communications to update the options programmed in the database.
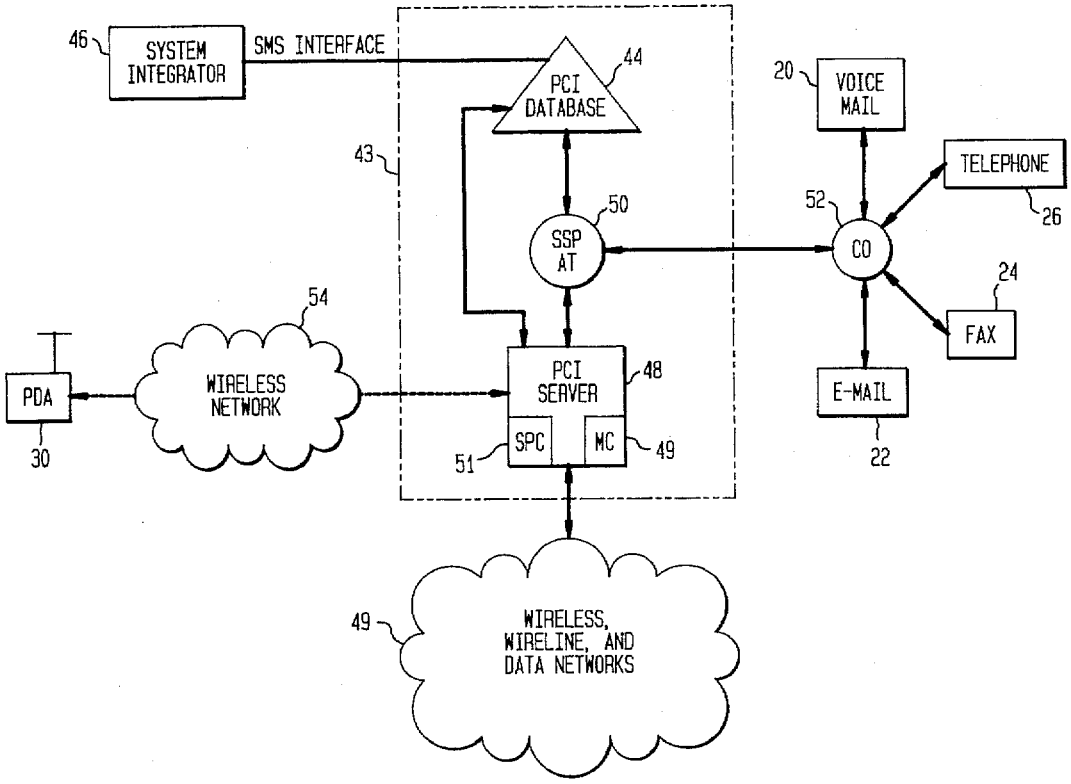
3 Claims, 21 Drawing Sheets