Oct. 24, 1933. J. W. BOWMAN 1,932,368

CARTON WHICH IS EQUIPPED TO BE USED AS A TOY
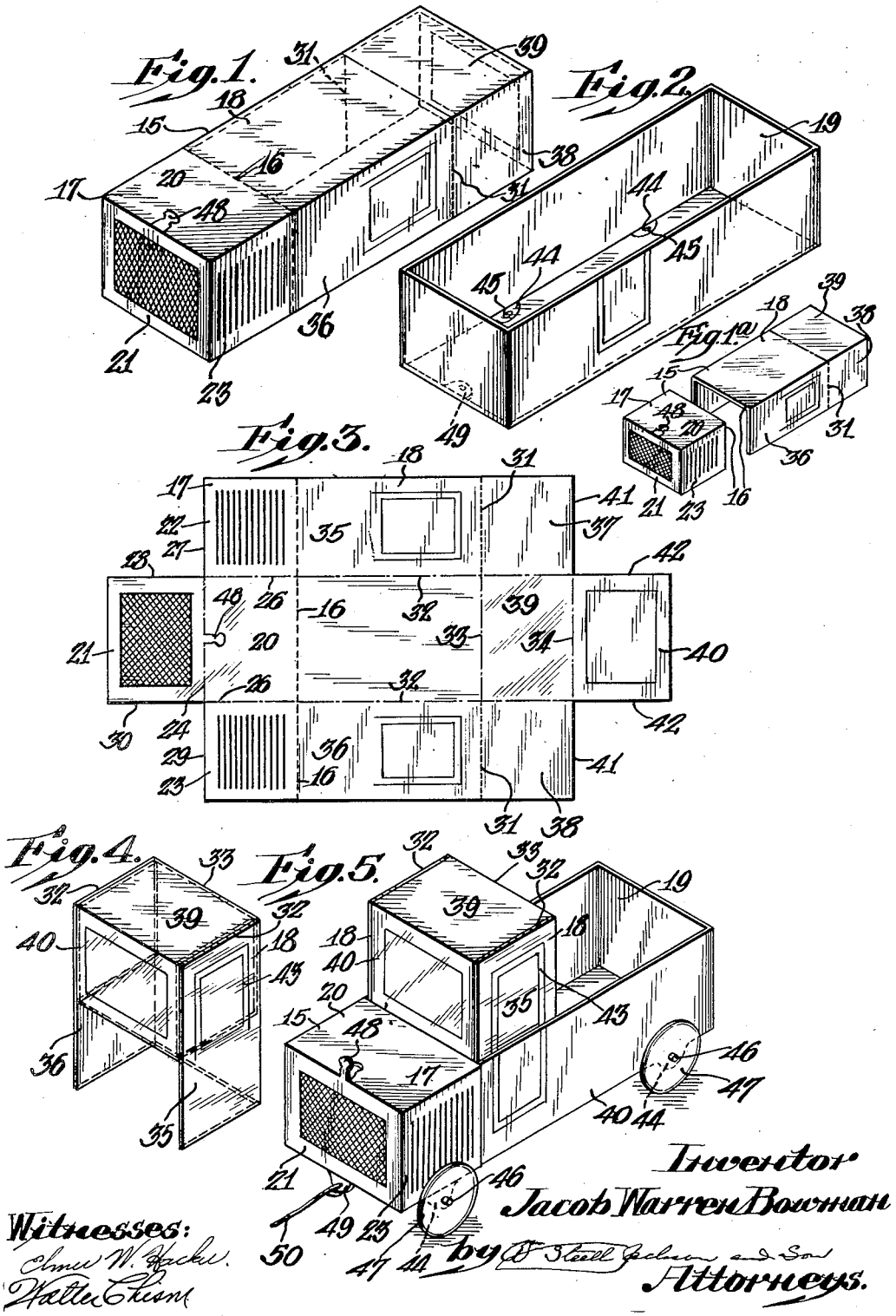
Filed May 4, 1933 3 Sheets-Sheet 1