Nov. 7, 1950 R. C. DEHMEL 2,529,468

RADIO RANGE NAVIGATION APPARATUS FOR TRAINING AIRCRAFT PERSONNEL

Filed July 27, 1945 15 Sheets-Sheet 1

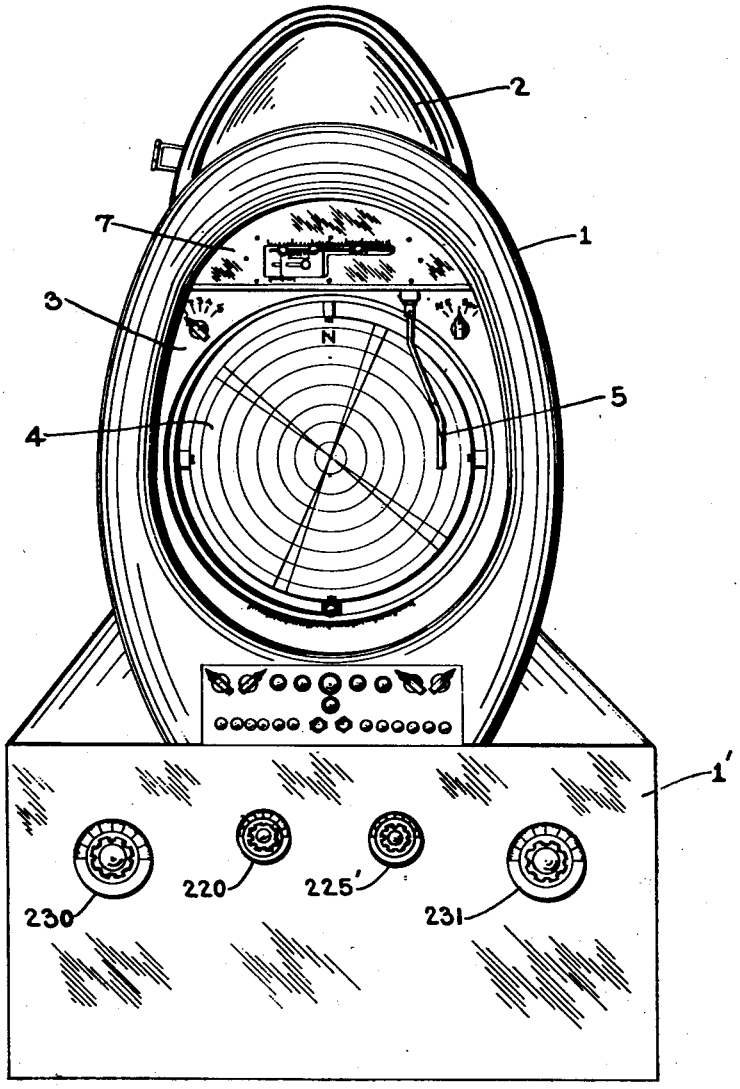

Fig. 1.

INVENTOR.
RICHARD C. DEHMEL
BY Bromley Dailey
ATTORNEY