No. 811,868. PATENTED FEB. 6, 1906.

H. J. PAARMANN.

MECHANICAL MOVEMENT.

APPLICATION FILED DEC. 21, 1903.

2 SHEETS—SHEET 1.

Fig. 1

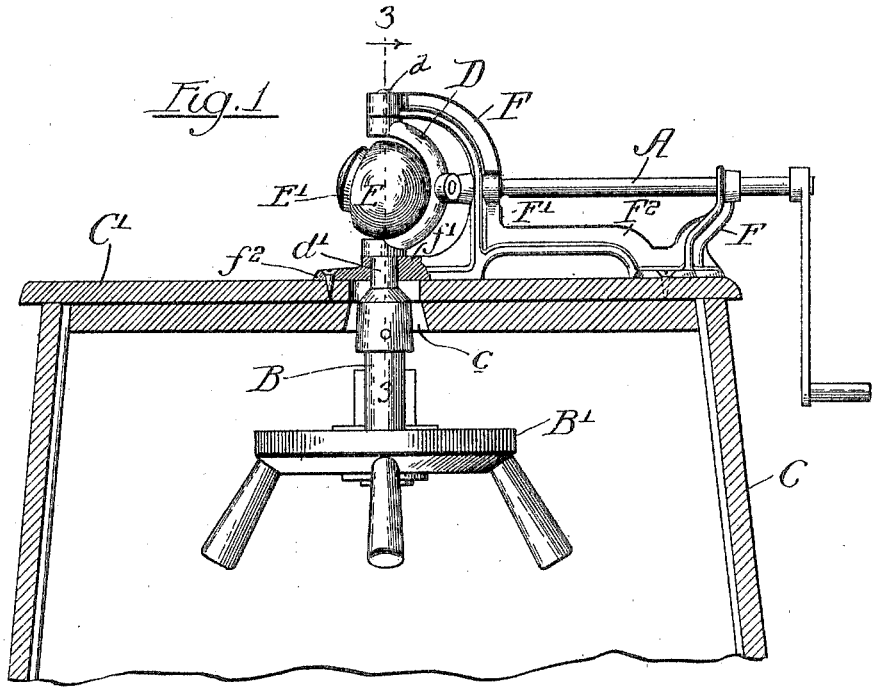

Fig. 3.

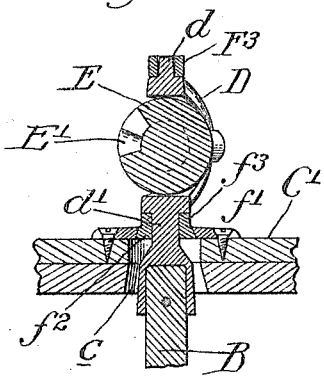

Fig. 2

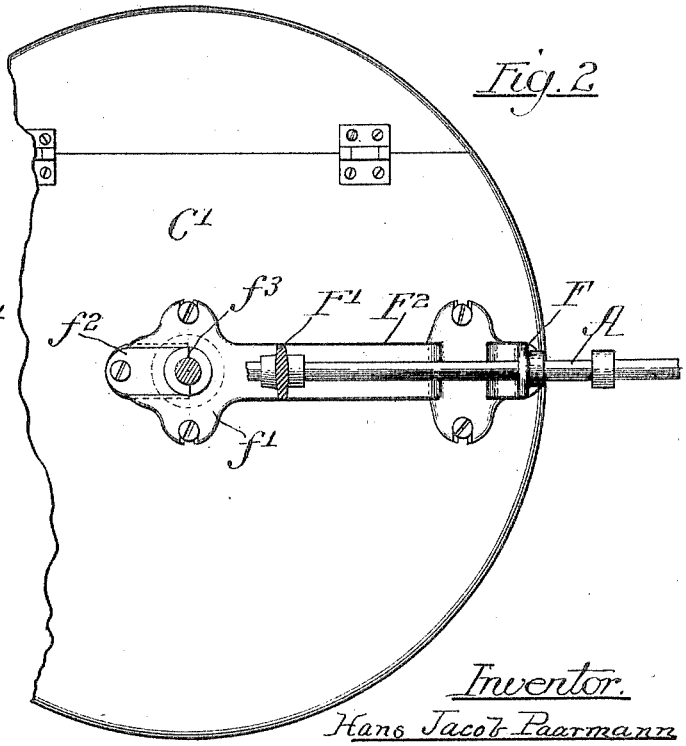

Witnesses:

H. G. Barrett

W. H. Hall

Inventor.

Hans Jacob Paarmann

by Pooler & Brown his Attys