June 25, 1957 J. H. MYER 2,796,967

EGG ALIGNER

Filed Aug. 1, 1955 2 Sheets-Sheet 1

FIG. 1.

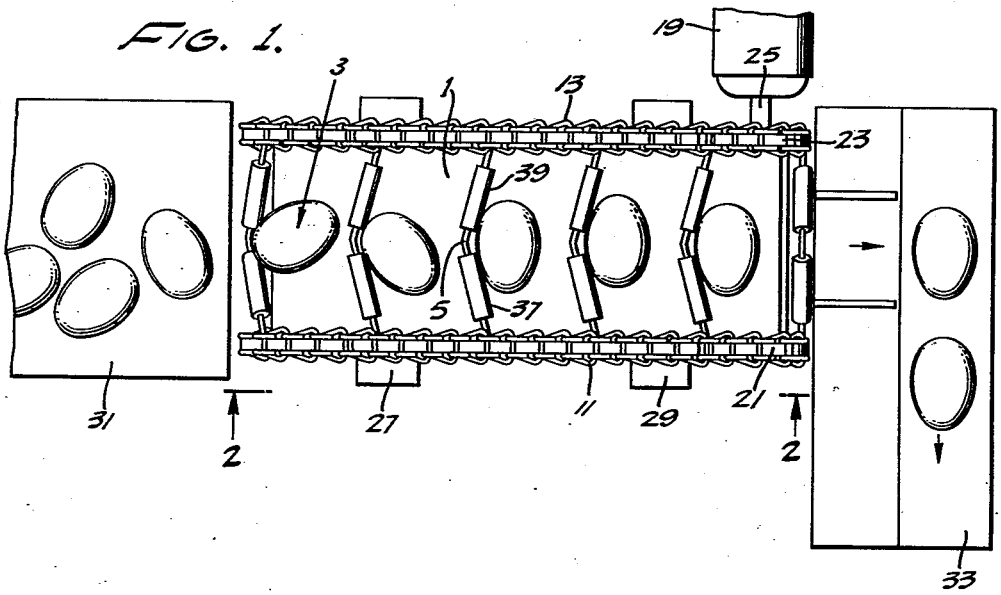

FIG. 2.

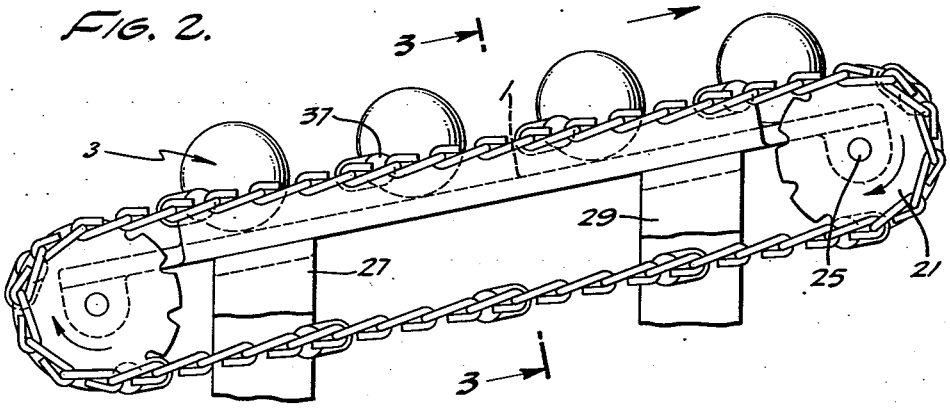

FIG. 3.

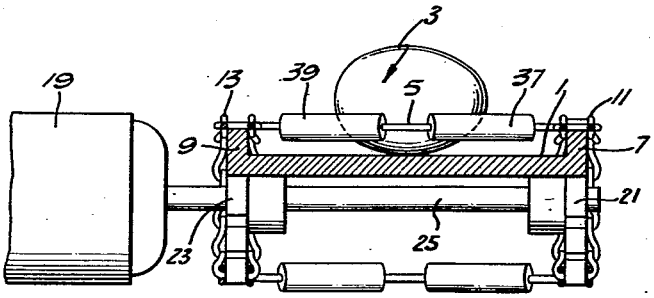

INVENTOR.
JON H. MYER
BY
AGENT