US005956367A

United States Patent [19]

Koo et al.

[11] **Patent Number: 5,956,367**

[45] **Date of Patent: Sep. 21, 1999**

[54] **RAKE RECEIVING APPARATUS FOR DIRECT SEQUENCE CODE DIVISION MULTIPLE ACCESS SYSTEM**

[75] Inventors: **Jun Mo Koo**, Seoul; **Je Woo Kim**, Kyongki-Do; **Jin Ick Lee**, Seoul, all of Rep. of Korea

[73] Assignee: **SK Telecom Co., Ltd**, Seoul, Rep. of Korea

[21] Appl. No.: **08/832,791**

[22] Filed: **Apr. 4, 1997**

[30] **Foreign Application Priority Data**

Apr. 4, 1996 [KR] Rep. of Korea 96-10299

[51] **Int. Cl.**[6] **H04B 15/00**; H04K 1/00; H04L 27/30

[52] **U.S. Cl.** **375/206**; 370/335; 370/342

[58] **Field of Search** 375/206, 200, 375/267, 347, 349, 348, 367, 202, 207, 208; 370/335, 342, 350, 441, 515

[56] **References Cited**

U.S. PATENT DOCUMENTS

4,984,247 1/1991 Kaufmann et al. 375/200
5,671,221 9/1997 Yang 370/18

Primary Examiner—Jason Chan
Assistant Examiner—Jean B Corrielus
Attorney, Agent, or Firm—Merchant, Gould, Smith, Edell, Welter & Schmidt, P.A.

[57] **ABSTRACT**

A rake receiving apparatus used in communication systems using a DS/CDMA (direct sequence code division multiple access) system, wherein a single demodulating finger is used for a plurality of multipath signals, thereby being capable of not only greatly reducing the complexity of its demodulators, but also achieving an improvement in performance where a large number of multipaths are used. The apparatus includes a searcher for extracting the phases of pseudo noise codes searcher for pseudo corresponding in number to existing multipaths, a combiner controlling unit for selecting those of the phase values from the searcher to be combined together, a combiner for combing selected phase values together, a pseudo noise code generator for generating pseudo noise codes, a demodulator for reversely sequencing its input signal using the output from the pseudo noise code generator, thereby recovering data, and a synchronization tracer for controlling the pseudo noise code generator such that the pseudo noise code phase of the pseudo noise code generator coincides with the pseudo noise code phase of the input signal at the synchronization tracer.
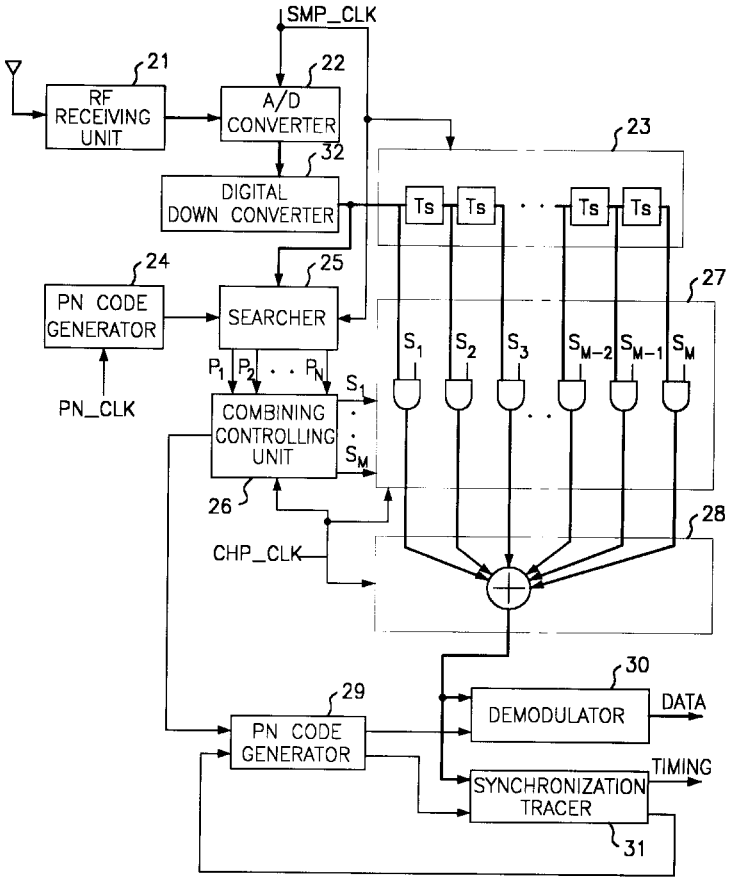
11 Claims, 7 Drawing Sheets