No. 632,667. Patented Sept. 5, 1899.

J. A. WILLIAMS.

MAGNETO ELECTRIC GENERATOR.

(Application filed June 10, 1898. Renewed July 26, 1899.)

(No Model.)

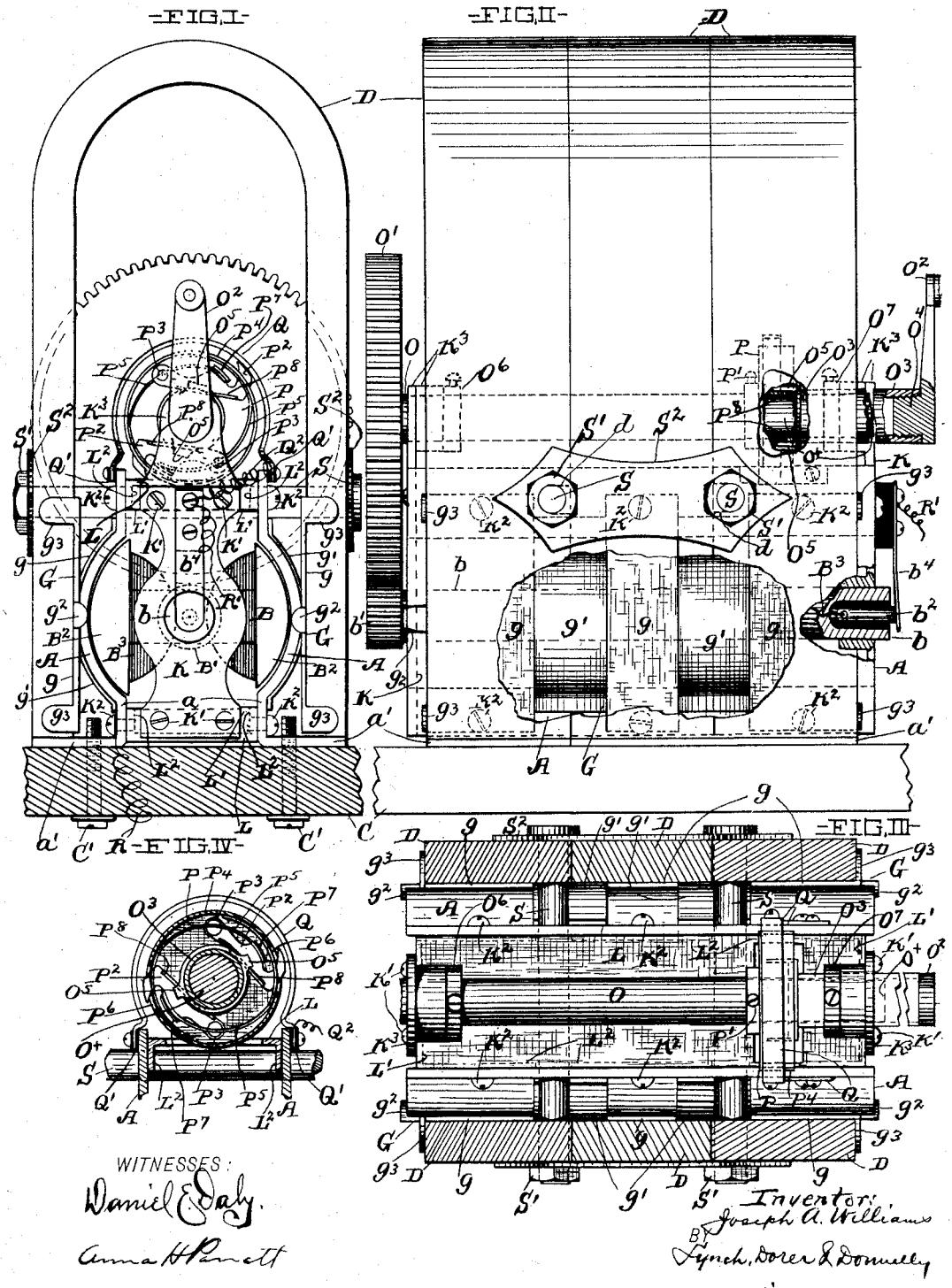

WITNESSES:

Daniel Daly.

Anna H. Barnett

Inventor:

Joseph A. Williams

By Lynch, Dorer & Donnelly

Their ATTORNEYS

THE NORRIS PETERS CO., PHOTO-LITHO., WASHINGTON, D. C.