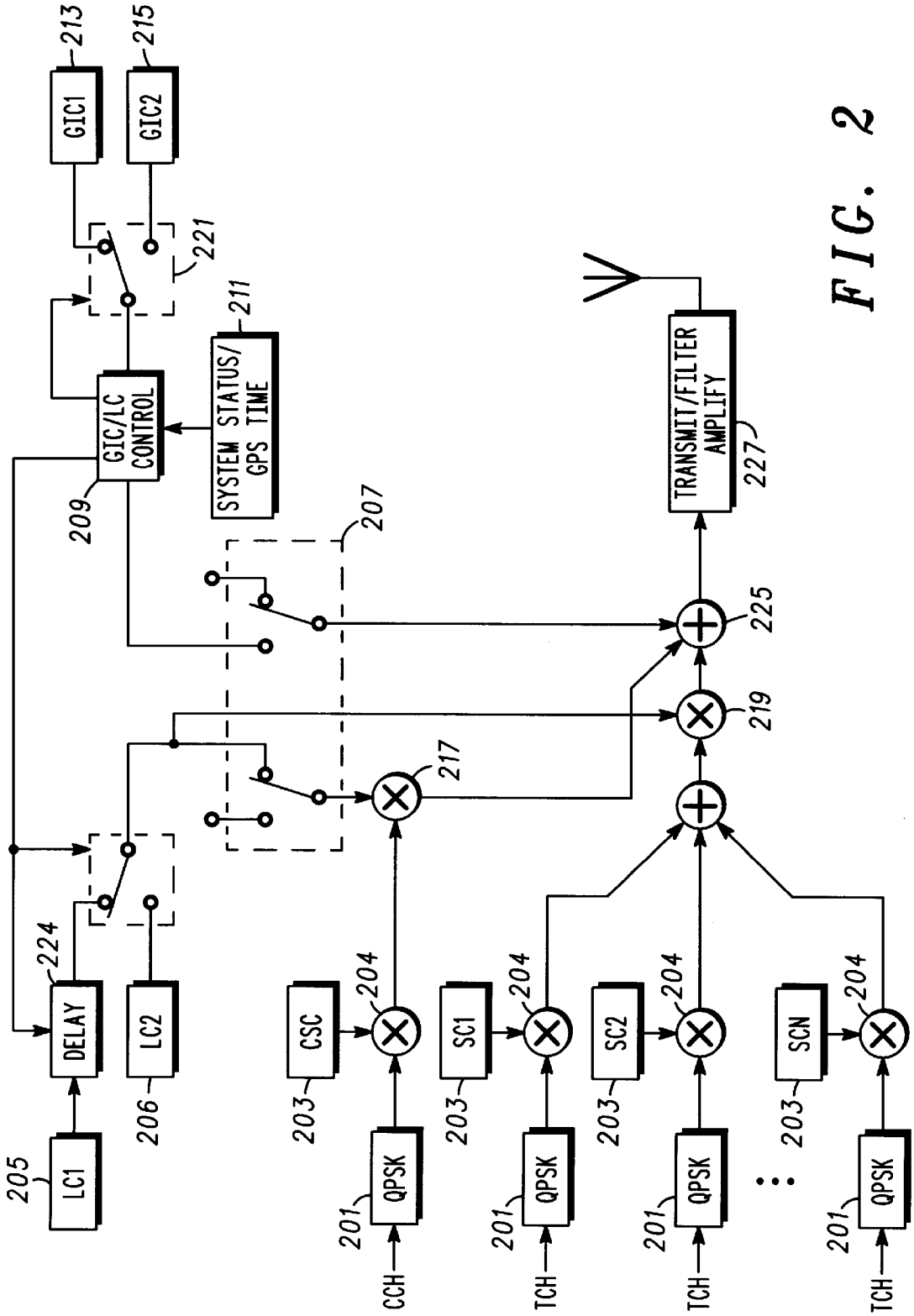
GIC1
213
GIC2
215
221
GIC/LC CONTROL
209
SYSTEM STATUS/ GPS TIME
211
207
TRANSMIT/FILTER AMPLIFY
227
225
219
217
DELAY
224
LC2
206
LC1
205
CSC
203
204
SC1
SC2
SCN
QPSK
201
CCH
TCH

FIG. 2