US009810767B1

(12) **United States Patent**
Hamilton

(10) **Patent No.: US 9,810,767 B1**
(45) **Date of Patent: Nov. 7, 2017**

(54) **LOCATION ESTIMATION SYSTEM**

(71) Applicant: **Michael Hamilton**, Lewisville, TX (US)

(72) Inventor: **Michael Hamilton**, Lewisville, TX (US)

(*) Notice: Subject to any disclaimer, the term of this patent is extended or adjusted under 35 U.S.C. 154(b) by 0 days.

(21) Appl. No.: **15/183,745**

(22) Filed: **Jun. 15, 2016**

Related U.S. Application Data

(60) Provisional application No. 62/180,596, filed on Jun. 16, 2015, provisional application No. 62/296,109, filed on Feb. 17, 2016.

(51) **Int. Cl.**
G01S 5/14 (2006.01)
H04W 4/02 (2009.01)
G01S 5/02 (2010.01)

(52) **U.S. Cl.**
CPC ***G01S 5/14*** (2013.01); ***G01S 5/0242*** (2013.01); ***G01S 5/0257*** (2013.01); ***H04W 4/027*** (2013.01)

(58) **Field of Classification Search**
CPC G01S 5/14; G01S 5/0242; G01S 5/0257; G01S 1/20; H04W 4/026; H04W 4/027
See application file for complete search history.

(56) **References Cited**

U.S. PATENT DOCUMENTS

2008/0234930 A1* 9/2008 Cheok G01S 5/0289 701/408
2012/0072110 A1* 3/2012 Venkatraman G01C 5/06 701/434
2015/0119078 A1* 4/2015 Sheynblat G01S 5/0036 455/456.1
2015/0330780 A1* 11/2015 Yuzawa G01C 5/06 702/150
2016/0259032 A1* 9/2016 Hehn G01S 5/0289

* cited by examiner

Primary Examiner — Syed Haider

(57) **ABSTRACT**

A location estimation system includes a plurality of Kalman filters, a UWB position system, a pressure sensor, a temperature sensor and a MEMs chip that provides gyroscope, accelerometer and magnetometer information. The data is Kalman filtered to determine precise location information that is more precise any sensor that is processed to determine the probably location of a device.
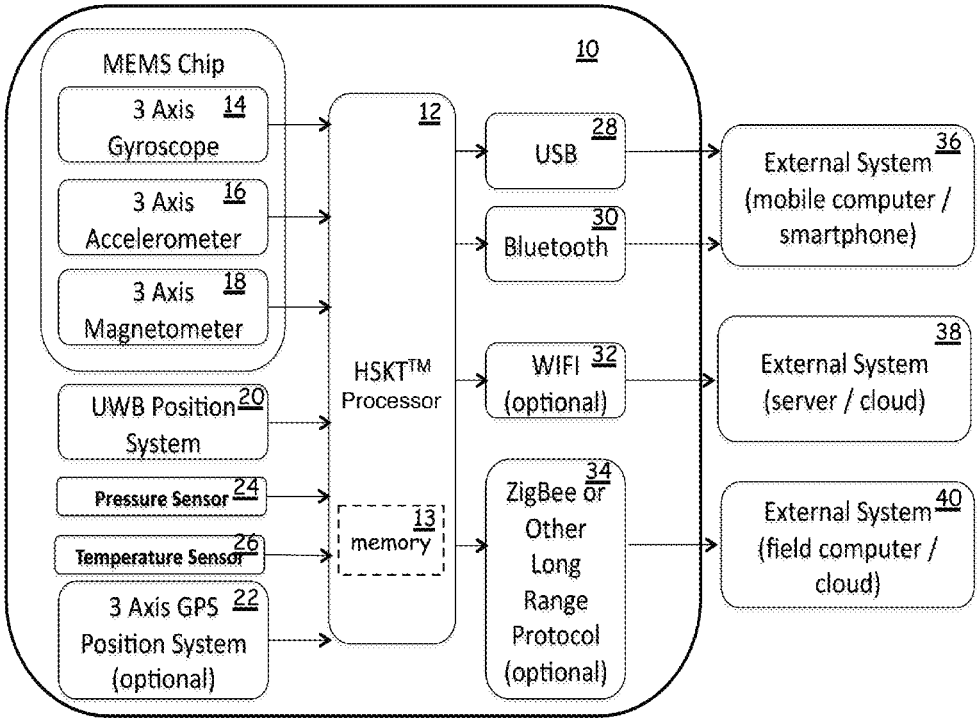
20 Claims, 16 Drawing Sheets