SUPERCONDUCTIVE GATING DEVICES

Original Filed Aug. 27, 1957 4 Sheets-Sheet 1

FIG. 1

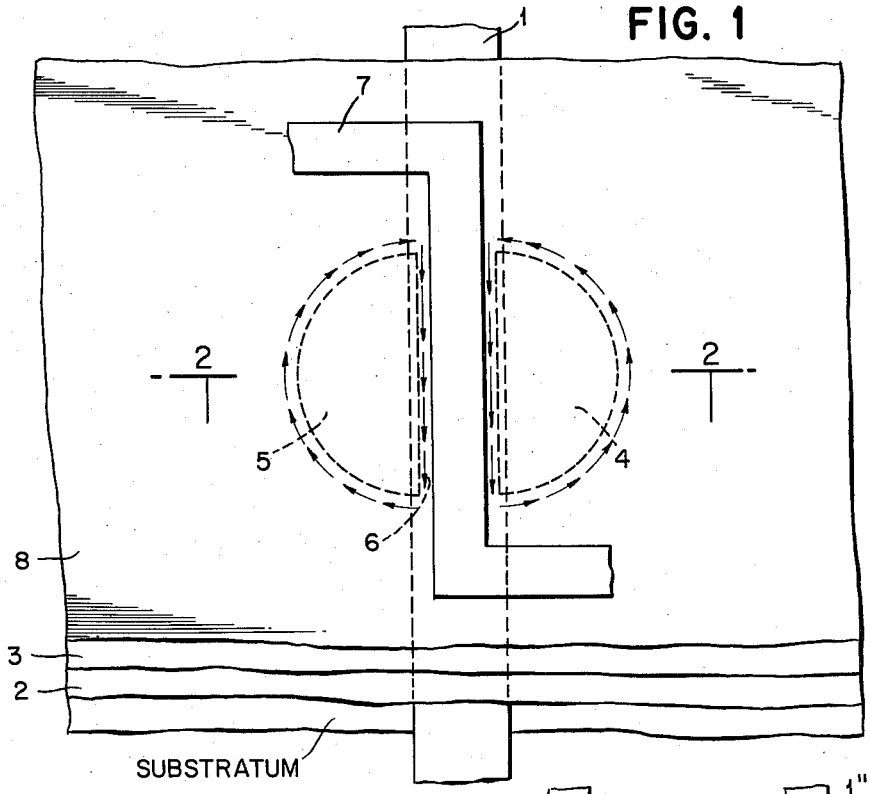

FIG. 3

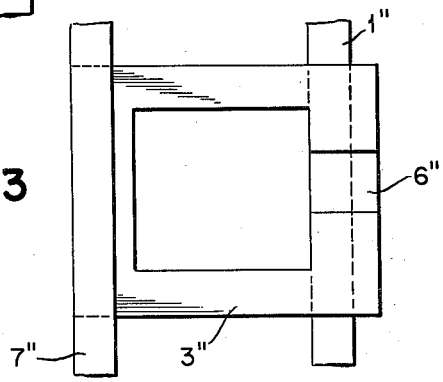

FIG. 2

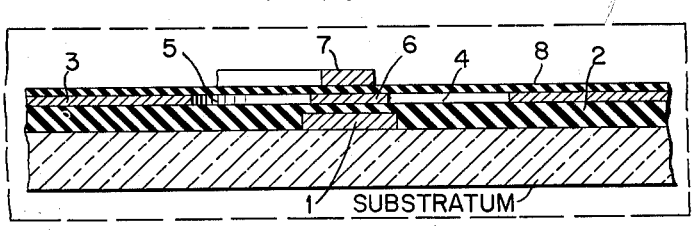

INVENTOR
JAMES W. CROWE
BY George Baron
ATTORNEY