US011074566B2

(12) **United States Patent**
Lee et al.

(10) **Patent No.: US 11,074,566 B2**
(45) **Date of Patent: Jul. 27, 2021**

(54) **POINT OF SALE TERMINAL**

(71) Applicant: **NCR Corporation**, Duluth, GA (US)

(72) Inventors: **Kwan Woo Lee**, Johns Creek, GA (US); **Michael Vincent Kane**, Norcross, GA (US)

(73) Assignee: **NCR Corporation**, Atlanta, GA (US)

(*) Notice: Subject to any disclaimer, the term of this patent is extended or adjusted under 35 U.S.C. 154(b) by 409 days.

(21) Appl. No.: **15/689,444**

(22) Filed: **Aug. 29, 2017**

(65) **Prior Publication Data**

US 2019/0066076 A1 Feb. 28, 2019

(51) **Int. Cl.**

G06Q 20/20	(2012.01)
G06F 1/16	(2006.01)
G07G 1/00	(2006.01)
G06Q 20/32	(2012.01)
G07G 1/12	(2006.01)

(52) **U.S. Cl.**

CPC ***G06Q 20/204*** (2013.01); ***G06F 1/1632*** (2013.01); ***G06Q 20/32*** (2013.01); ***G07G 1/0009*** (2013.01); ***G07G 1/0018*** (2013.01); ***G07G 1/12*** (2013.01)

(58) **Field of Classification Search**

CPC G06Q 20/204; G06Q 20/32; G06Q 20/20; G06F 1/1632; G07G 1/0009; G07G 1/0018

See application file for complete search history.

(56) **References Cited**

U.S. PATENT DOCUMENTS

D458,255	S *	6/2002	Hsu	D14/373
9,033,228	B2 *	5/2015	Govindarajan	G06Q 90/00 235/383
9,558,482	B2 *	1/2017	Hicks	G07G 1/0081
D810,816	S *	2/2018	Chen	D18/4.4
D831,106	S *	10/2018	Saeed	D18/4.5
2014/0058859	A1 *	2/2014	Alexander	G06Q 20/20 705/17
2015/0185768	A1 *	7/2015	Voege	G06Q 30/0281 361/679.3
2017/0140615	A1 *	5/2017	Larnac	G07G 1/0018
2017/0372286	A1 *	12/2017	Hiroi	G06Q 20/20
2019/0004572	A1 *	1/2019	Luo	G07G 1/12

OTHER PUBLICATIONS

European Search Report—dated Oct. 5, 2018.

* cited by examiner

Primary Examiner — Florian M Zeender
Assistant Examiner — Whitney Poffenbarger
(74) *Attorney, Agent, or Firm* — Schwegman, Lundberg & Woessner

(57) **ABSTRACT**

Disclosed herein is a point of sale terminal. The point of sale terminal may include a housing, a customer display, and a payment device. The housing may define a customer display opening and a tablet opening. The customer display may be located within the housing and arranged to be visible through the customer display opening. The payment device may be located within the housing proximate customer display opening.
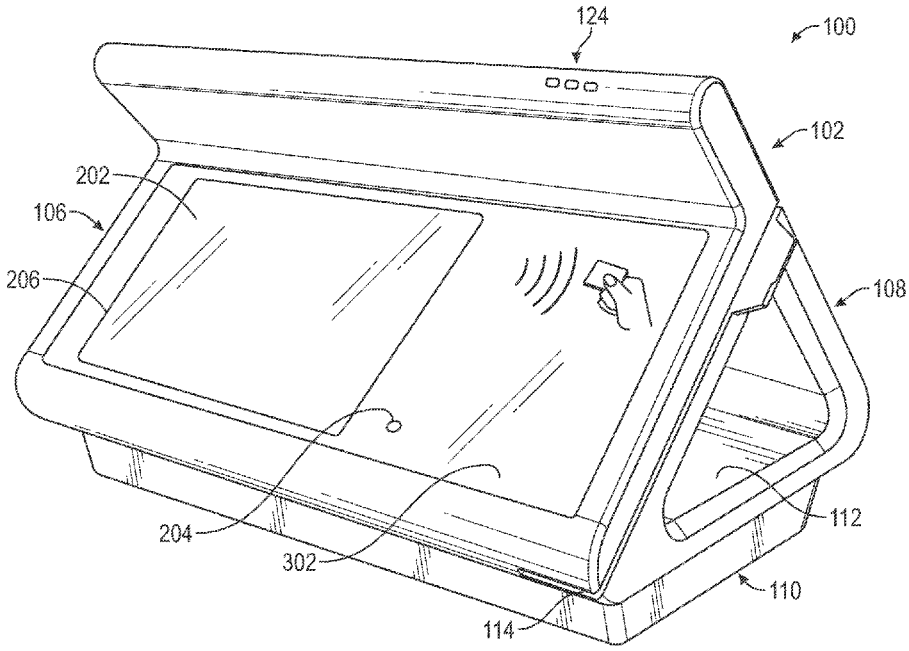
17 Claims, 3 Drawing Sheets