US009943166B1

(12) **United States Patent**
Cleary

(10) **Patent No.: US 9,943,166 B1**
(45) **Date of Patent: Apr. 17, 2018**

(54) **COLLAPSIBLE SHELF ASSEMBLY**

(71) Applicant: **Wendy Cleary**, Elma, NY (US)

(72) Inventor: **Wendy Cleary**, Elma, NY (US)

(*) Notice: Subject to any disclaimer, the term of this patent is extended or adjusted under 35 U.S.C. 154(b) by 0 days.

(21) Appl. No.: **15/413,609**

(22) Filed: **Jan. 24, 2017**

(51) **Int. Cl.**
A47B 43/00 (2006.01)
A47B 61/04 (2006.01)
A47B 47/00 (2006.01)

(52) **U.S. Cl.**
CPC ***A47B 43/00*** (2013.01); ***A47B 47/0075*** (2013.01); ***A47B 61/04*** (2013.01)

(58) **Field of Classification Search**
CPC A47B 43/00; A47B 43/04; A47B 61/04; A47B 47/0075; A47F 5/10; A47F 5/101
See application file for complete search history.

(56) **References Cited**

U.S. PATENT DOCUMENTS

1,216,250 A * 2/1917 Bittle A47B 43/04 211/10
1,847,066 A 3/1932 Berg
2,389,910 A 11/1945 Hoffman
2,845,185 A 7/1958 Winderweedle, Jr.
2,943,899 A 7/1960 Beller
3,669,276 A 6/1972 Woods
4,214,669 A * 7/1980 McQuiston B65D 88/524 220/1.5
4,577,772 A * 3/1986 Bigliardi B65D 88/121 220/1.5
4,579,401 A * 4/1986 Mears A47B 43/00 312/258
4,630,746 A * 12/1986 Fortenberry B65D 19/18 220/1.5
4,848,618 A * 7/1989 Yuan B65D 88/524 220/1.5
4,867,513 A * 9/1989 Choi F16B 12/26 312/108
5,038,953 A * 8/1991 Radar B65D 11/1826 220/6
5,107,639 A * 4/1992 Morin E04B 1/3445 220/6
5,253,763 A * 10/1993 Kirkley B65D 19/16 206/600
5,382,087 A * 1/1995 Pouch A47B 43/00 160/135
D417,556 S 12/1999 Schell
7,063,397 B2 6/2006 Sabounjian
8,342,347 B2 * 1/2013 Hay B65D 11/1866 16/352
8,376,477 B2 * 2/2013 Schinzing A47B 45/00 312/205
8,657,124 B2 2/2014 Brown
(Continued)

FOREIGN PATENT DOCUMENTS

DE 102004041625 A1 * 4/2006 ..... A47B 43/00
WO WO2014184413 11/2014

Primary Examiner — Stanton L Krycinski

(57) **ABSTRACT**

A collapsible shelf assembly includes a plurality of uprights. Each of the uprights is selectively positioned between a collapsed position and an extended position. A plurality of shelves is provided and each of the shelves is slidably coupled between an associated pair of the uprights. Each of the shelves may support an object. Each of the uprights is selectively positioned between a maximum distance apart from each other and a minimum distance apart from each other.
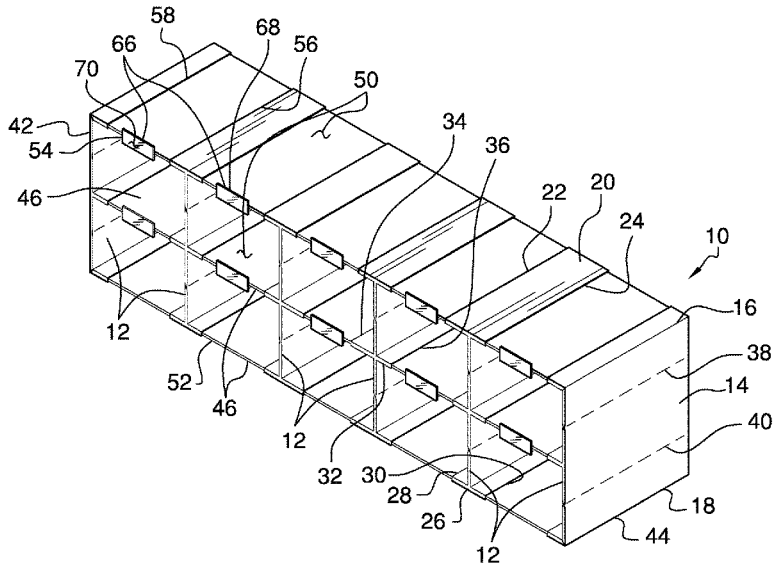
7 Claims, 4 Drawing Sheets