J. L. MOTT.

Cooking Stove.

No. 466. Patented Nov. 20, 1837.

FIG. 1.

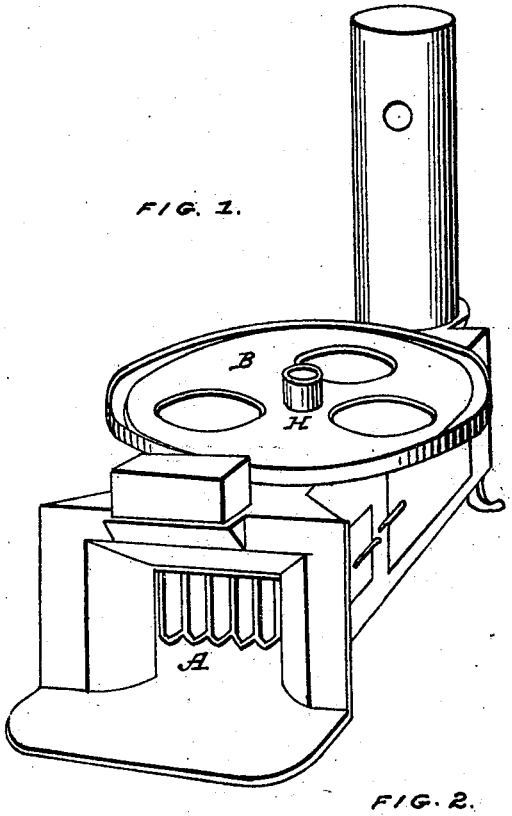

FIG. 3.

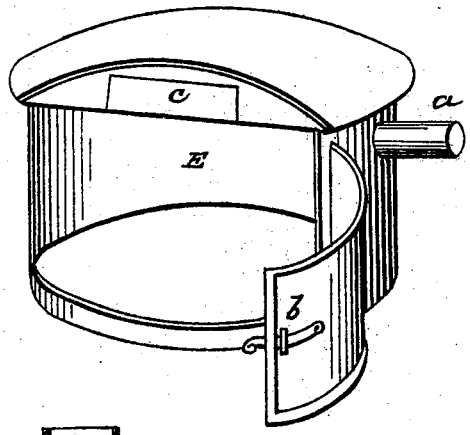

FIG. 2.

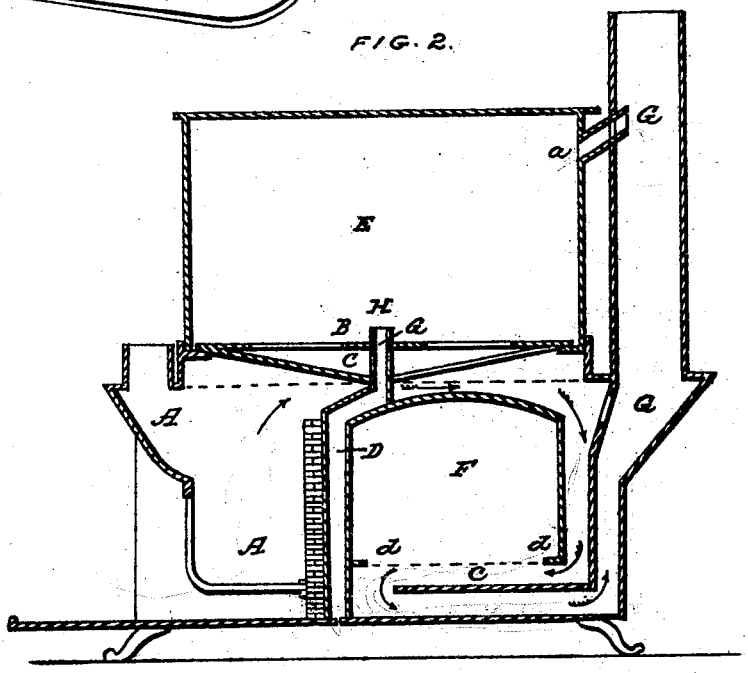

N. PETERS, Photo-Lithographer, Washington, D. C.