US010197365B1

(12) **United States Patent**
**Blyskal et al.**

(10) **Patent No.: US 10,197,365 B1**
(45) **Date of Patent: Feb. 5, 2019**

(54) **SCALABLE EFFECTS NET WARHEAD**

(71) Applicant: **The United States of America as Represented by the Secretary of the Army**, Washington, DC (US)

(72) Inventors: **Tomasz Blyskal**, Flemington, NJ (US); **Richard Fong**, Boonton, NJ (US); **LaMar Thompson**, Bloomfield, NJ (US)

(73) Assignee: **The United States of America as Represented by the Secretary of the Army**, Washington, DC (US)

( * ) Notice: Subject to any disclaimer, the term of this patent is extended or adjusted under 35 U.S.C. 154(b) by 0 days.

(21) Appl. No.: **15/788,946**

(22) Filed: **Oct. 20, 2017**

(51) **Int. Cl.**

| | |
|---|---|
| ***F41H 13/00*** | (2006.01) |
| ***F42B 12/02*** | (2006.01) |
| ***F42B 12/56*** | (2006.01) |
| ***F42B 12/66*** | (2006.01) |
| ***F42B 12/68*** | (2006.01) |

(52) **U.S. Cl.**
CPC ..... ***F41H 13/0006*** (2013.01); ***F42B 12/02*** (2013.01); ***F42B 12/56*** (2013.01); ***F42B 12/66*** (2013.01); ***F42B 12/68*** (2013.01)

(58) **Field of Classification Search**
CPC ..... F41H 13/00; F41H 13/0006; F42B 12/00; F42B 12/02; F42B 12/205; F42B 12/56; F42B 12/58; F42B 12/60; F42B 12/66; F42B 12/68
USPC ..... 102/501, 502; 89/1.11, 1.14, 1.1
See application file for complete search history.

(56) **References Cited**

U.S. PATENT DOCUMENTS

| | | | | |
|---|---|---|---|---|
| 2,372,383 | A * | 3/1945 | Lee | F41H 11/04 102/504 |
| 6,626,077 | B1 * | 9/2003 | Gilbert | F41H 13/0006 102/400 |
| 7,028,947 | B2 * | 4/2006 | Burns | B64D 7/00 244/1 TD |
| 7,412,916 | B2 * | 8/2008 | Lloyd | F41H 13/0006 102/473 |
| 7,415,917 | B2 * | 8/2008 | Lloyd | F41H 13/0006 102/293 |
| 8,141,493 | B1 * | 3/2012 | Kuchman | F41H 13/0006 102/439 |
| 8,205,537 | B1 * | 6/2012 | Dupont | F41H 13/0006 102/504 |
| 8,387,507 | B2 * | 3/2013 | Johnson | F41H 11/02 89/1.1 |
| 8,387,540 | B2 * | 3/2013 | Merems | F41H 11/02 102/501 |
| 9,074,858 | B2 * | 7/2015 | Yee | F41H 11/02 |
| 2012/0091252 | A1 * | 4/2012 | Zatterqvist | F41H 11/02 244/3.1 |
| 2016/0376029 | A1 * | 12/2016 | Sekiya | F41H 11/02 244/110 F |

FOREIGN PATENT DOCUMENTS

| | | | | |
|---|---|---|---|---|
| EP | 000872705 | A2 * | 10/1998 | B63G 7/02 |
| FR | 2965908 | B1 * | 2/2017 | F41H 11/02 |

* cited by examiner

*Primary Examiner* — James S Bergin
(74) *Attorney, Agent, or Firm* — Michael C. Sachs

(57) **ABSTRACT**

A spin launched unmanned aerial system projectile includes a net means for disabling a selected target. The net means includes deployment mechanism and weights attached thereto which are cast at said target through use of an ejection spring means. Centripetal forces on the still spinning petals/weights open the net means as it is cast at the target.
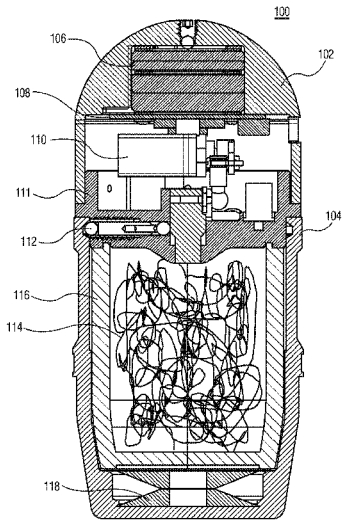
**12 Claims, 2 Drawing Sheets**