Sheet 1. 2 Sheets.

Sholes, Glidden & Soule.
Type Writing Mach.

No. 79,265. Patented Jun. 23, 1868

Fig. 9.

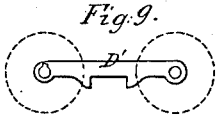

Fig. 1.

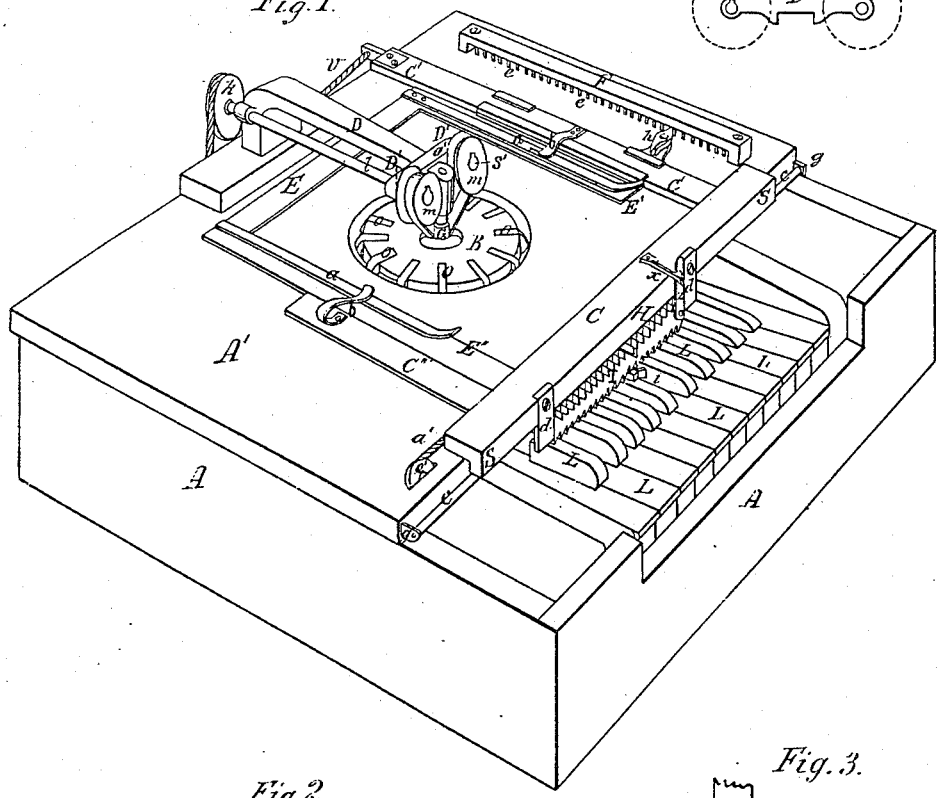

Fig. 2.

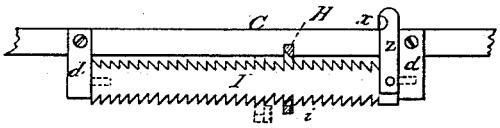

Fig. 3.

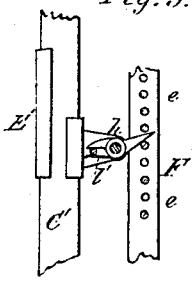

WITNESSES.

James Densmore.

L. Haïler.

INVENTORS.

C. Latham Sholes
Carlos Glidden
S. W. Soule
by Dodge & Munn
attys.