US010248165B2

(12) **United States Patent**
**Myung et al.**

(10) **Patent No.: US 10,248,165 B2**
(45) **Date of Patent: Apr. 2, 2019**

(54) **FOLDABLE PLATE AND FOLDABLE DISPLAY DEVICE WITH THE SAME**

(71) Applicant: **LG Display Co., Ltd.**, Seoul (KR)

(72) Inventors: **Noh Jin Myung**, Gyeonggi-do (KR); **Se Jin Jang**, Gyeonggi-do (KR); **Tae Hyoung Kwak**, Gyeonggi-do (KR)

(73) Assignee: **LG Display Co., Ltd.**, Seoul (KR)

( * ) Notice: Subject to any disclaimer, the term of this patent is extended or adjusted under 35 U.S.C. 154(b) by 0 days.

(21) Appl. No.: **16/032,196**

(22) Filed: **Jul. 11, 2018**

(65) **Prior Publication Data**

US 2018/0321710 A1 Nov. 8, 2018

**Related U.S. Application Data**

(62) Division of application No. 14/982,644, filed on Dec. 29, 2015, now Pat. No. 10,042,394.

(30) **Foreign Application Priority Data**

Dec. 31, 2014 (KR) ..... 10-2014-0195837
May 29, 2015 (KR) ..... 10-2015-0075816

(51) **Int. Cl.**
***G02F 1/1333*** (2006.01)
***G06F 1/16*** (2006.01)

(52) **U.S. Cl.**
CPC ..... ***G06F 1/1652*** (2013.01)

(58) **Field of Classification Search**
CPC ..... G02F 1/1333
See application file for complete search history.

(56) **References Cited**

U.S. PATENT DOCUMENTS

2013/0286462 A1 10/2013 Yeo et al.
2014/0029171 A1 1/2014 Lee
2014/0029212 A1 1/2014 Hwang et al.
2014/0287213 A1* 9/2014 Lee ..... G02F 1/133308 428/217
2014/0300529 A1 10/2014 Kim et al.
2015/0277110 A1* 10/2015 Oh ..... G06F 3/0412 359/513

FOREIGN PATENT DOCUMENTS

CN 103578356 A 2/2014
CN 103985338 A 8/2014
EP 2 690 521 A1 1/2014
GB 2 360 622 A 9/2001

OTHER PUBLICATIONS

Chinese Office Action dated Dec. 5, 2017, issued in corresponding Chinese Application No. 201511021010.4.

* cited by examiner

*Primary Examiner* — Jerry Wu
(74) *Attorney, Agent, or Firm* — Morgan, Lewis & Bockius LLP

(57) **ABSTRACT**

Provided are a foldable plate and a foldable display device with the same. A foldable plate includes: a first area including a first material having a first elastic modulus, a second area including the first material, the second area being separate from the first area, a third area including a second material having a second elastic modulus lower than the first elastic modulus, the third area being interposed between the first area and the second area.
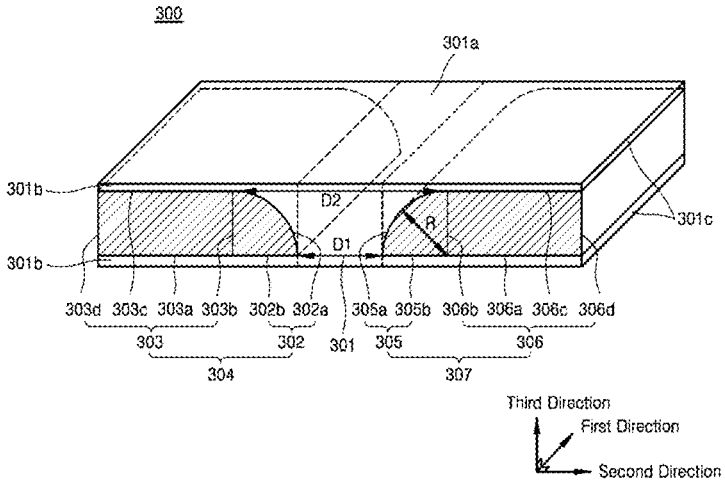
**6 Claims, 14 Drawing Sheets**