US007142765B2

(12) **United States Patent**
Rapp et al.

(10) **Patent No.: US 7,142,765 B2**
(45) **Date of Patent: Nov. 28, 2006**

(54) **HIGH DENSITY OPTICAL FIBER DISTRIBUTION FRAME WITH MODULES**

(75) Inventors: **David E. Rapp**, Eden Prairie, MN (US); **Timothy J. Haataja**, Prior Lake, MN (US); **Kristofer J. Bolster**, Shakopee, MN (US); **Heidi L. Miller**, Shakopee, MN (US)

(73) Assignee: **ADC Telecommunications, Inc.**, Eden Prairie, MN (US)

(*) Notice: Subject to any disclaimer, the term of this patent is extended or adjusted under 35 U.S.C. 154(b) by 0 days.

(21) Appl. No.: **11/151,932**

(22) Filed: **Jun. 13, 2005**

(65) **Prior Publication Data**

US 2005/0232566 A1 Oct. 20, 2005

Related U.S. Application Data

(62) Division of application No. 10/745,918, filed on Dec. 23, 2003, now Pat. No. 6,920,274.

(51) **Int. Cl.**
G02B 6/00 (2006.01)

(52) **U.S. Cl.** **385/137**

(58) **Field of Classification Search** 385/134, 385/135, 136, 137

See application file for complete search history.

(56) **References Cited**

U.S. PATENT DOCUMENTS

5,363,465	A	11/1994	Korkowski et al.	
5,497,444	A	3/1996	Wheeler	
5,758,003	A	5/1998	Wheeler et al.	
5,966,492	A	10/1999	Bechamps et al.	
6,424,781	B1 *	7/2002	Puetz et al.	385/135
6,535,682	B1 *	3/2003	Puetz et al.	385/135
6,556,763	B1 *	4/2003	Puetz et al.	385/135
6,760,531	B1 *	7/2004	Solheid et al.	385/135
6,793,517	B1	9/2004	Neer et al.	
2003/0095772	A1	5/2003	Solheid et al.	
2005/0003697	A1	1/2005	Neer et al.	
2005/0048831	A1	3/2005	Neer et al.	

* cited by examiner

Primary Examiner—Chandrika Prasad
(74) *Attorney, Agent, or Firm*—Merchant & Gould P.C.

(57) **ABSTRACT**

A fiber optic telecommunications frame is provided including termination modules positioned on left and right sides of the frame. The frame further includes left and right vertical cable guides. The frame includes a horizontal passage linking the left and right panels and the cable guides. The termination modules hold fiber optic modules with front termination locations. The fiber optic modules can house couplers, such as splitters, combiners, and wave length division multiplexers. A retention mechanism retains each fiber optic module in a partially removed position from the termination module.
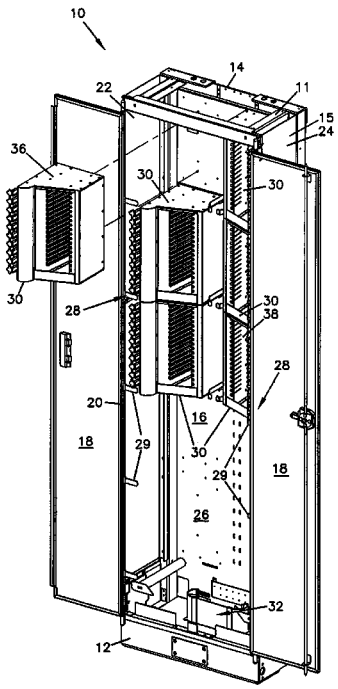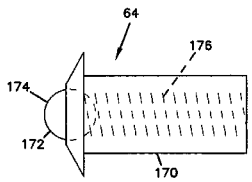
10 Claims, 12 Drawing Sheets