US006424165B1

(12) **United States Patent**
de Boer et al.

(10) **Patent No.: US 6,424,165 B1**
(45) **Date of Patent: Jul. 23, 2002**

(54) **ELECTROSTATIC APPARATUS FOR MEASUREMENT OF MICROFRACTURE STRENGTH**

(75) Inventors: **Maarten de Boer**; **Fernando Bitsie**, both of Albuquerque, NM (US); **Brian D. Jensen**, Ann Arbor, MI (US)

(73) Assignee: **Sandia Corporation**, Albuquerque, NM (US)

(*) Notice: Subject to any disclaimer, the term of this patent is extended or adjusted under 35 U.S.C. 154(b) by 0 days.

(21) Appl. No.: **09/665,980**

(22) Filed: **Sep. 20, 2000**

(51) **Int. Cl.**[7] **G01R 31/02**; E21B 4/00; G01M 7/00; H02N 10/00

(52) **U.S. Cl.** **324/754**; 324/755; 324/758; 324/759; 73/152.17; 73/12.01; 73/760; 310/307; 310/309

(58) **Field of Search** 324/754, 755, 324/759, 758; 310/309, 307; 73/152.17, 12.01, 760

(56) **References Cited**

U.S. PATENT DOCUMENTS

3,842,664 A * 10/1974 Conway, Jr. 73/760
5,620,931 A * 4/1997 Tsang et al. 438/50
5,808,781 A * 9/1998 Arney et al. 359/291
5,949,682 A * 9/1999 Dickinson et al. 364/468.28
5,959,376 A * 9/1999 Allen ..... 310/40 MM
6,118,534 A * 9/2000 Miller 356/345
6,133,670 A * 10/2000 Rodgers et al. 310/309
6,137,206 A * 10/2000 Hill 310/309
6,211,599 B1 * 9/2001 Barnes et al. 310/309
6,291,922 B1 * 9/2001 Dhuler 310/307
6,323,663 B1 * 11/2001 Nakata et al. 324/754

* cited by examiner

Primary Examiner—N. Le
Assistant Examiner—Wasseem H. Hamdan
(74) *Attorney, Agent, or Firm*—Brian W. Dodson

(57) **ABSTRACT**

A new class of materials testing apparatus has been invented. Particularly suited to the measurement of fracture and fatigue properties in the extremely strong materials encountered in microelectromechanical systems, material strains well in excess of 1% can be applied pseudostatically, dynamically, or repetitively by these testers. There are no other practical methods to determine these material properties routinely in a process environment, and few alternatives in any circumstances.
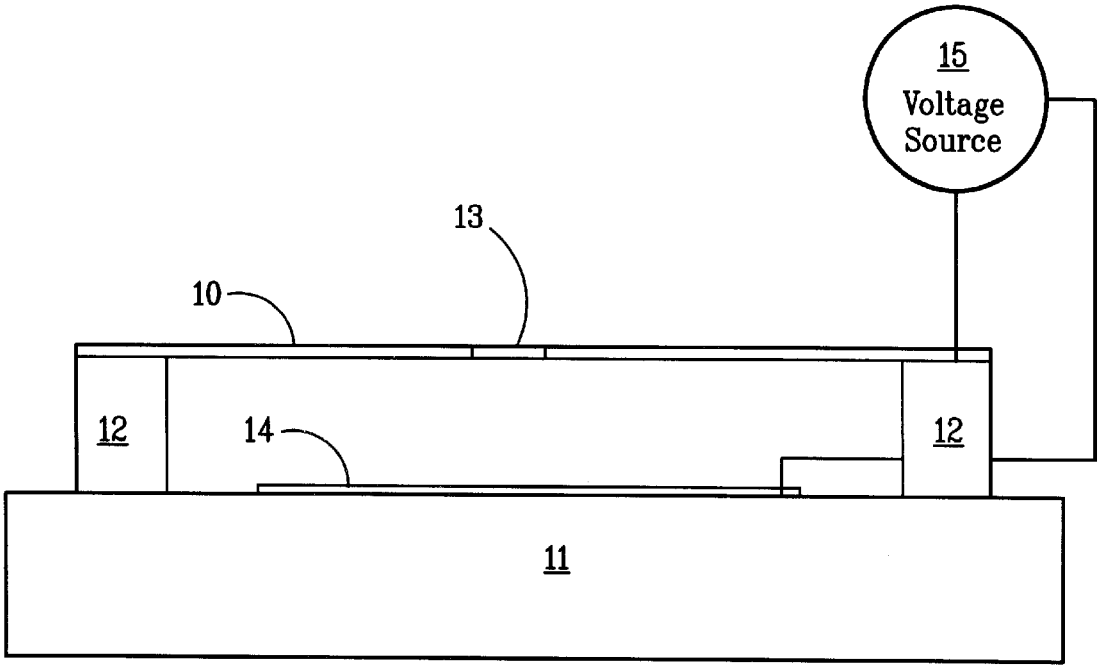
18 Claims, 5 Drawing Sheets