(No Model.)

2 Sheets—Sheet 1.

G. H. F. SCHRADER.

VALVE.

No. 495,064.

Patented Apr. 11, 1893.

FIG. 1.

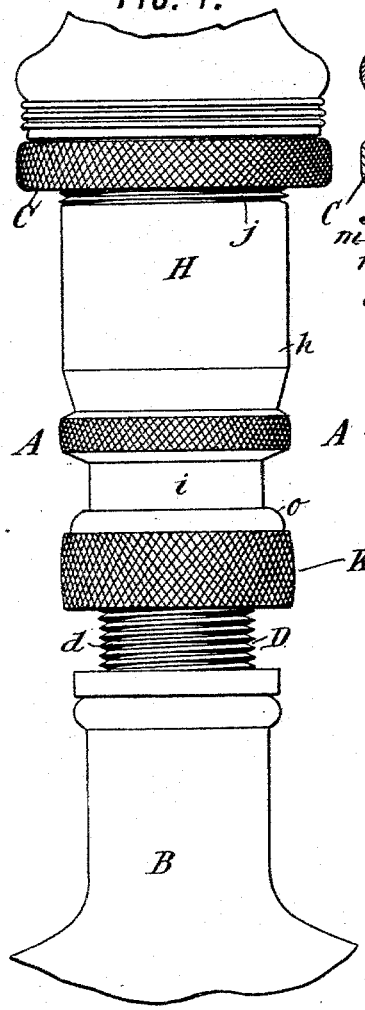

FIG. 2.

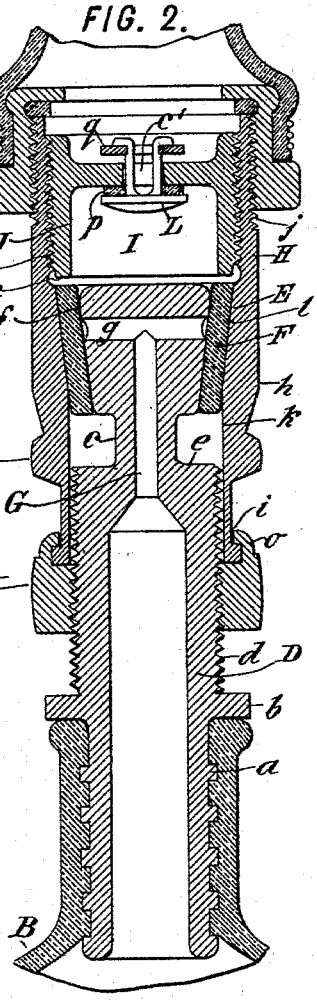

FIG. 3.

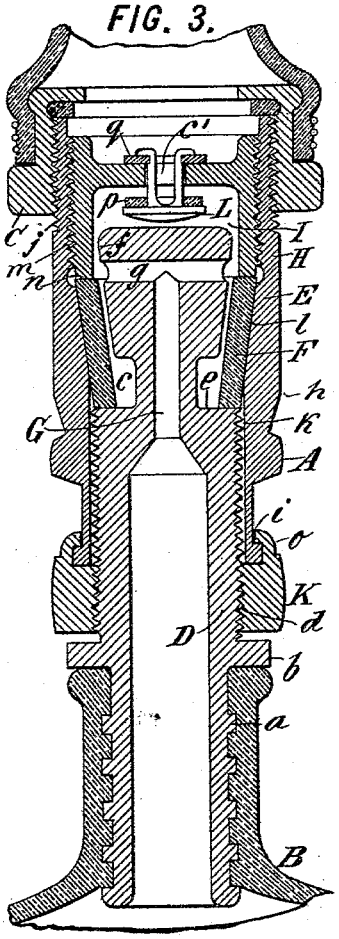

FIG. 7.

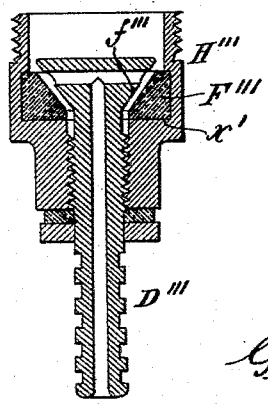

WITNESSES:
John Becker
Fred White

INVENTOR:
George H. F. Schrader,
By his Attorneys,
Arthur C. Fraser & Co.

THE NORRIS PETERS CO., PHOTO-LITHO., WASHINGTON, D. C.