A. D. HART.

Cooking Stove.

No. 3,164. Patented July 8, 1843.

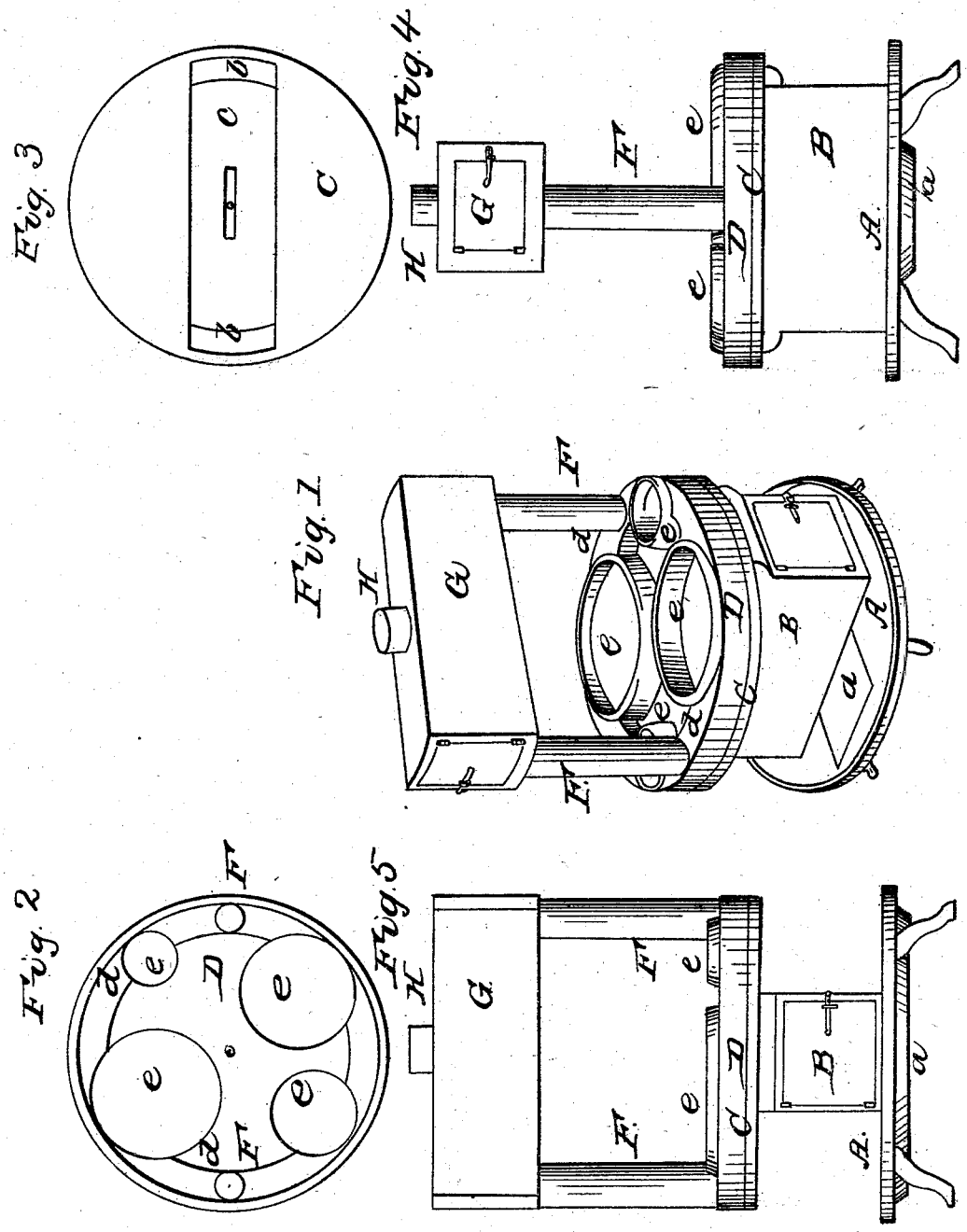

N. PETERS, Photo-Lithographer, Washington, D. C.