FIG.1

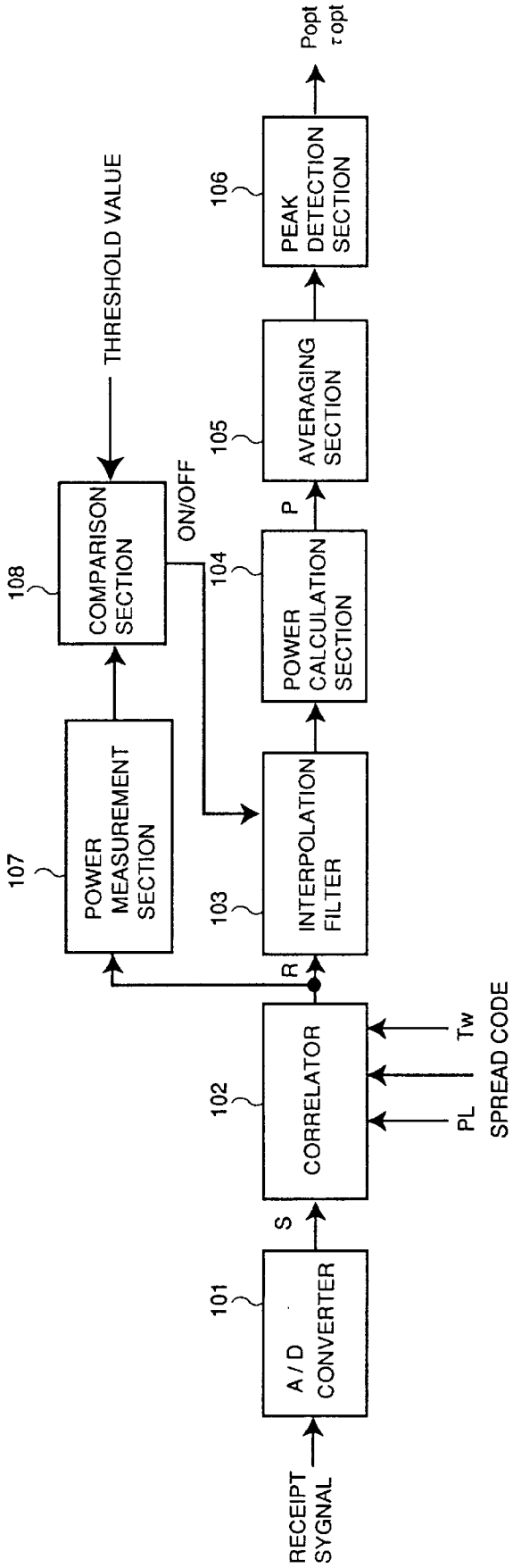
RECEIPT SYGNAL
101
A / D CONVERTER
S
102
CORRELATOR
PL
Tw
SPREAD CODE
R
103
INTERPOLATION FILTER
104
POWER CALCULATION SECTION
P
105
AVERAGING SECTION
106
PEAK DETECTION SECTION
Popt
τopt
107
POWER MEASUREMENT SECTION
108
COMPARISON SECTION
ON/OFF
THRESHOLD VALUE