Nov. 14, 1939. E. A. LINK, JR 2,179,663

RECORDER

Filed Sept. 30, 1936 4 Sheets-Sheet 1

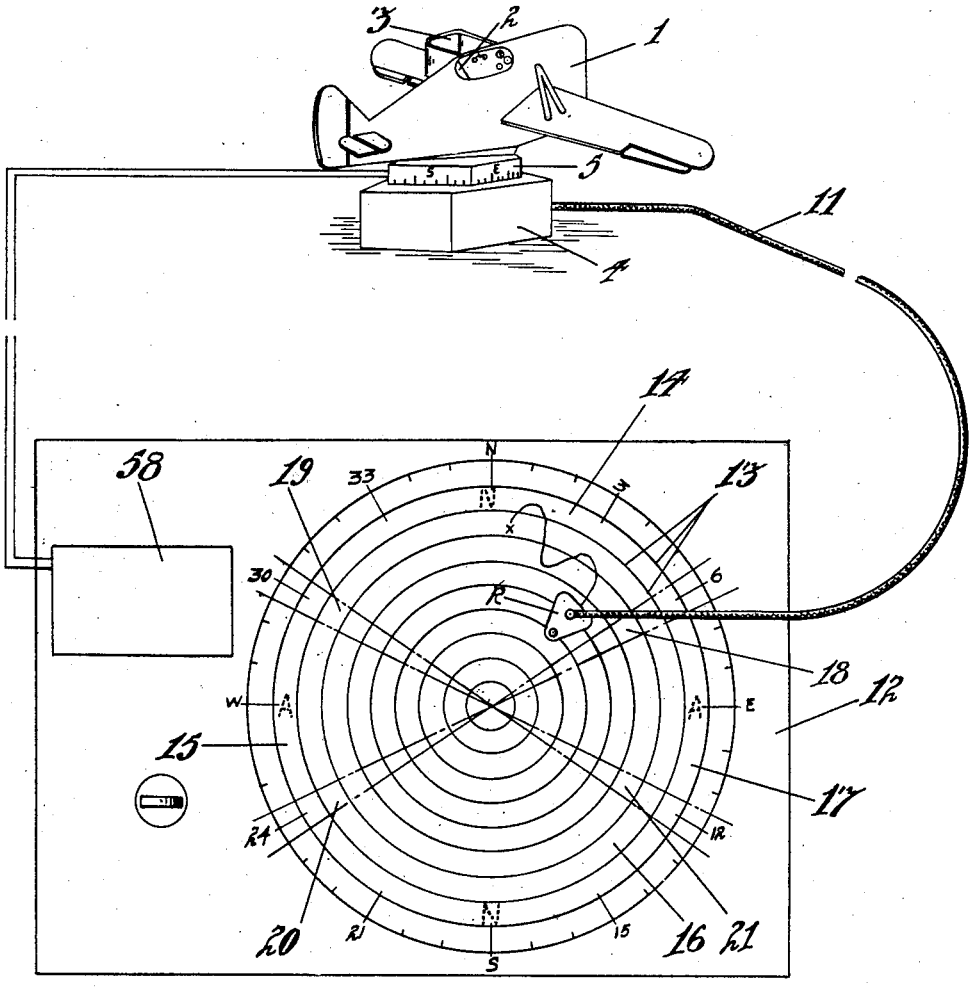

Fig. 1.

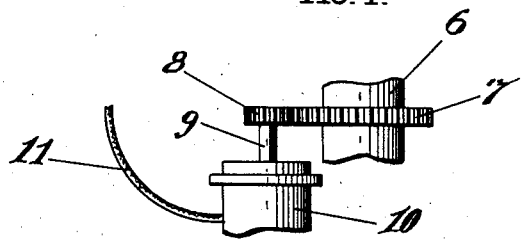

Fig. 2.

INVENTOR.
EDWIN A. LINK, JR.

BY Philip S. Hopkins
ATTORNEY.