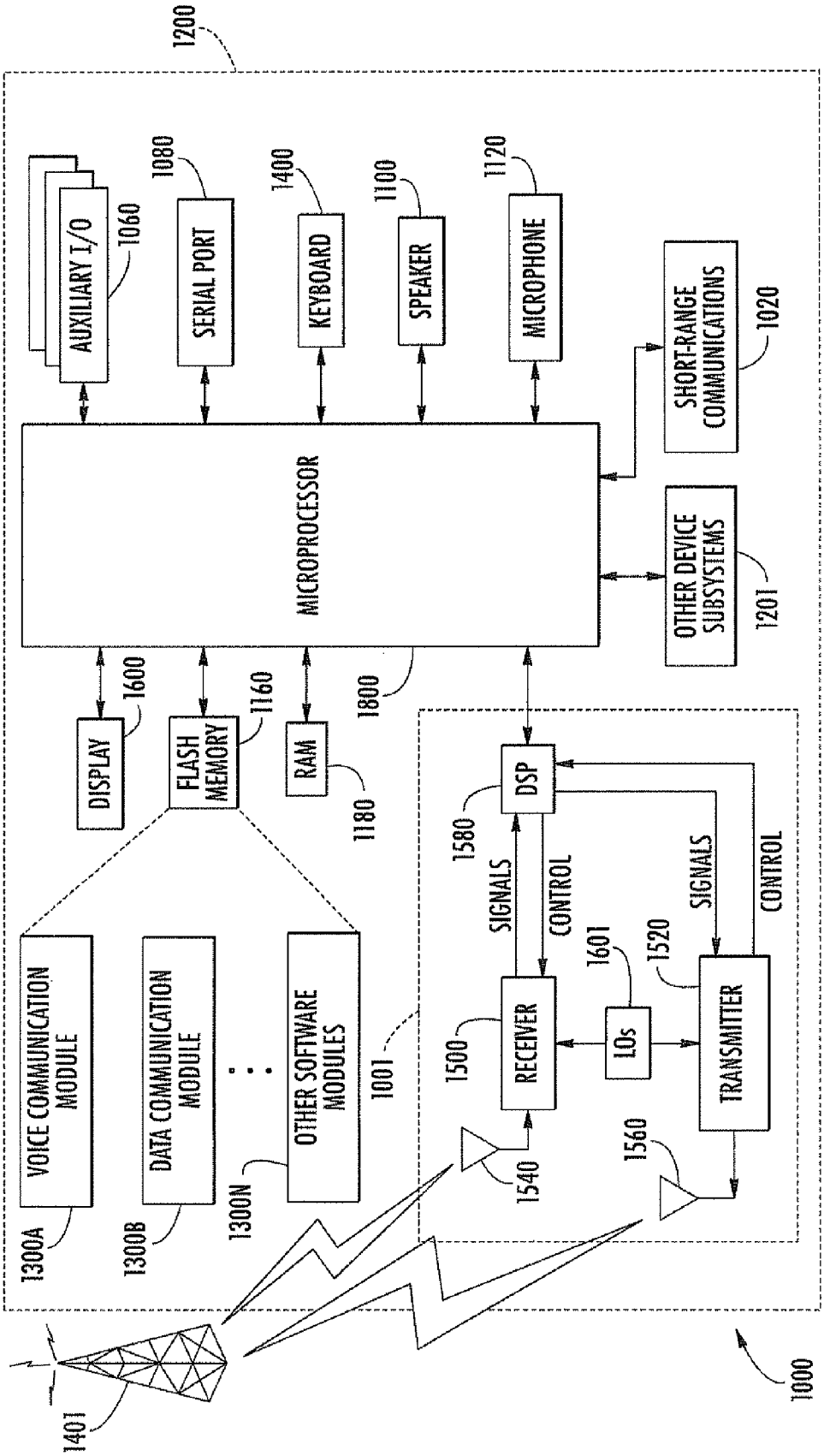
1200
AUXILIARY I/O
1060
SERIAL PORT
1080
KEYBOARD
1400
SPEAKER
1100
MICROPHONE
1120
SHORT-RANGE COMMUNICATIONS
1020
MICROPROCESSOR
1800
OTHER DEVICE SUBSYSTEMS
1201
DISPLAY
1600
FLASH MEMORY
1160
RAM
1180
DSP
1580
SIGNALS
CONTROL
SIGNALS
CONTROL
1601
1520
RECEIVER
1500
LOs
TRANSMITTER
1540
1560
VOICE COMMUNICATION MODULE
1300A
DATA COMMUNICATION MODULE
1300B
OTHER SOFTWARE MODULES
1300N
1001
1401
1000

FIG. 6