No. 708,663. Patented Sept. 9, 1902.

J. W. RENO.

INCLINED ELEVATOR.

(Application filed Feb. 20, 1902.)

(No Model.) 2 Sheets—Sheet 1.

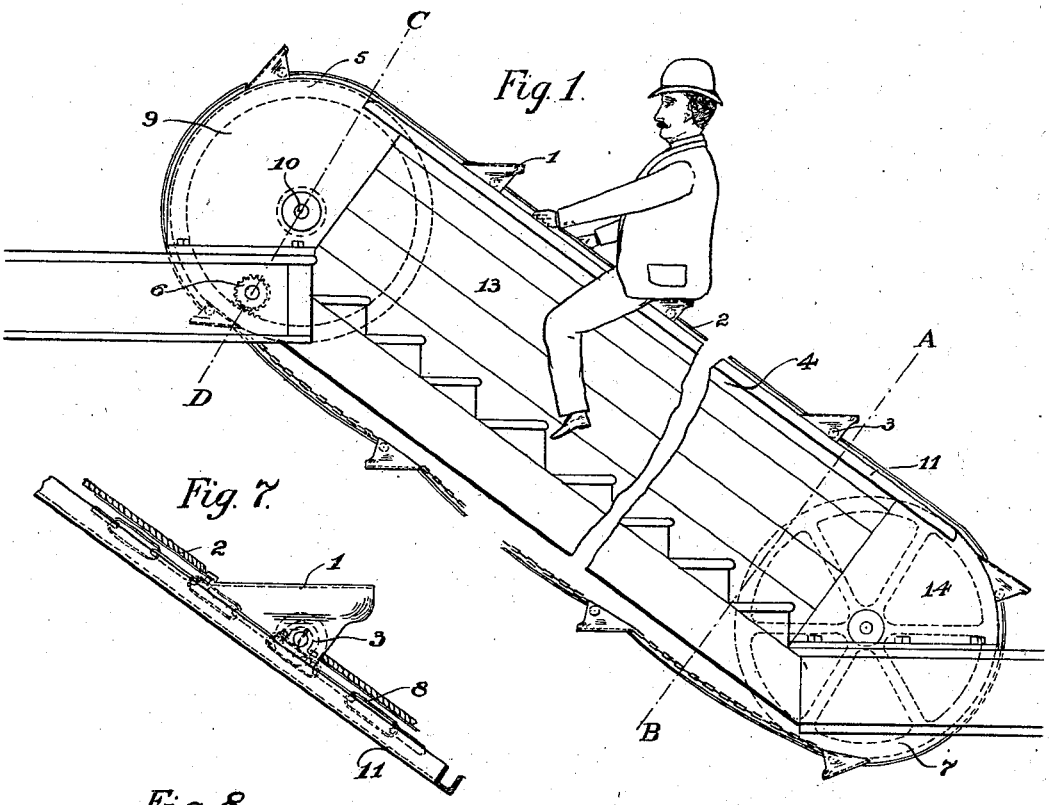

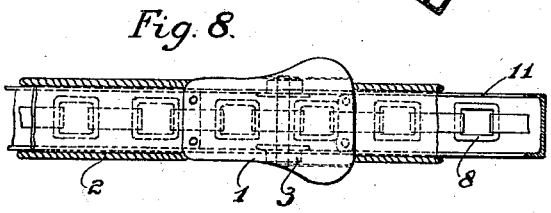

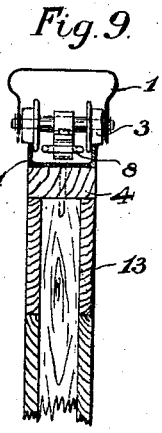

Witnesses
Olga Tuch
Ewen N. Whitfield

Inventor.
Jesse W. Reno
By his Attorney
Chas. J. Earll.

THE NORRIS PETERS CO., PHOTO-LITHO., WASHINGTON, D. C.