US007500463B2

(12) **United States Patent**
Shuba

(10) **Patent No.: US 7,500,463 B2**
(45) **Date of Patent: Mar. 10, 2009**

(54) **SHUBA ROTARY INTERNAL COMBUSTION ENGINE WITH ROTATING COMBUSTION CHAMBERS**

(76) Inventor: **Yaroslav M. Shuba**, Shota Rustaveli Street, 40, Apt. 16, Kyiv (UA) 01023

(*) Notice: Subject to any disclaimer, the term of this patent is extended or adjusted under 35 U.S.C. 154(b) by 0 days.

(21) Appl. No.: **11/601,790**

(22) Filed: **Nov. 20, 2006**

(65) **Prior Publication Data**

US 2008/0135012 A1 Jun. 12, 2008

(51) **Int. Cl.**

F02B 53/00	(2006.01)
F02B 53/04	(2006.01)
F01C 1/00	(2006.01)
F01C 21/00	(2006.01)
F04C 18/00	(2006.01)
F04C 2/00	(2006.01)
F04C 15/00	(2006.01)

(52) **U.S. Cl.** **123/243**; 123/248; 123/240; 123/229; 418/248; 418/186

(58) **Field of Classification Search** 123/248, 123/240, 235, 237, 229; 418/186, 187, 188, 418/248

See application file for complete search history.

(56) **References Cited**

U.S. PATENT DOCUMENTS

749,654	A	*	1/1904	Banta et al.	123/229
811,117	A	*	1/1906	Andrews	418/212
868,374	A	*	10/1907	Thomure	418/186
1,145,161	A	*	7/1915	Mears	123/248
1,242,692	A	*	10/1917	Hibner	418/248
1,255,865	A		2/1918	Doane	
1,257,156	A	*	2/1918	Van Lith	123/248
1,424,977	A	*	8/1922	Bidwell	123/231
1,427,053	A	*	8/1922	Bidwell	123/231
1,577,141	A	*	3/1926	Morrison et al.	123/243
1,792,026	A		2/1931	Nichols	
1,811,729	A	*	6/1931	Molkenbur	123/229
1,923,561	A	*	8/1933	Winckler	123/240
2,511,441	A		6/1950	Loubiere	
2,864,346	A	*	12/1958	Taylor, Jr.	123/243
2,988,065	A	*	6/1961	Wankel et al.	123/242
3,181,511	A	*	5/1965	Johnson	123/240
3,244,157	A	*	4/1966	Tanferna et al.	418/246
3,314,368	A	*	4/1967	Drutchas et al.	418/248
3,422,801	A	*	1/1969	Mido	123/229

(Continued)

FOREIGN PATENT DOCUMENTS

JP	61241420	A	*	10/1986

Primary Examiner—Thai-Ba Trieu

(57) **ABSTRACT**

A rotary internal combustion engine has a hollow stator with inner cylindrical surface, and a right-prism rotor having rhombus-shape base with round angles and convex sides whose big diagonal equals the diameter of the stator. Two cavities within the rotor on opposite ends of the big diagonal of rhombus-shape base form principal combustion chambers with spark plugs. The hollow stator contains a diametrically opposed space separators sealingly engaged with the surface of the rotor. Variable volume intake, compression, power and exhaust chambers of the engine are formed by the inner surface of the stator, outer surface of the rotor and the side surfaces of the space separators. Intake and exhaust chambers are connected to the intake and exhaust systems via respective conduits. Compression and power chambers are connected to the combustion chambers via a slot openings controlled by the sliding covers moving within a radial rectangular grooves in the rotor.
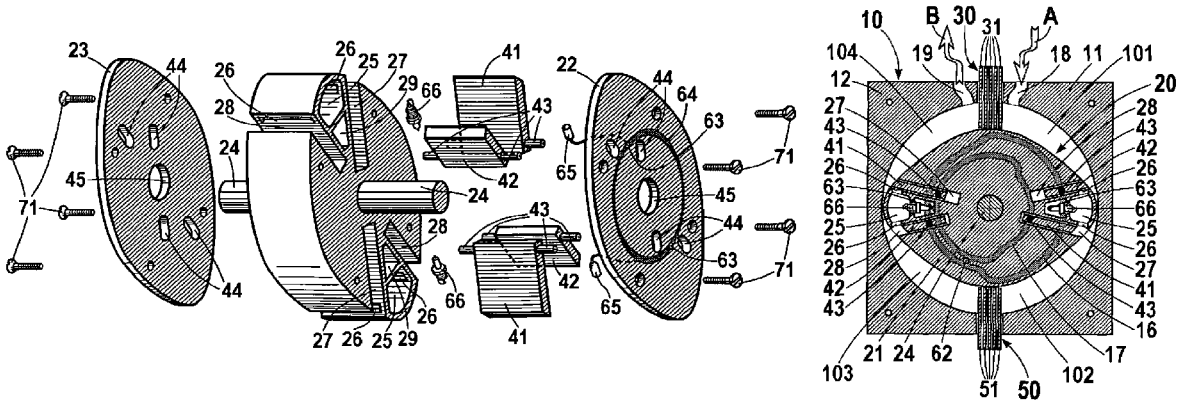
3 Claims, 6 Drawing Sheets