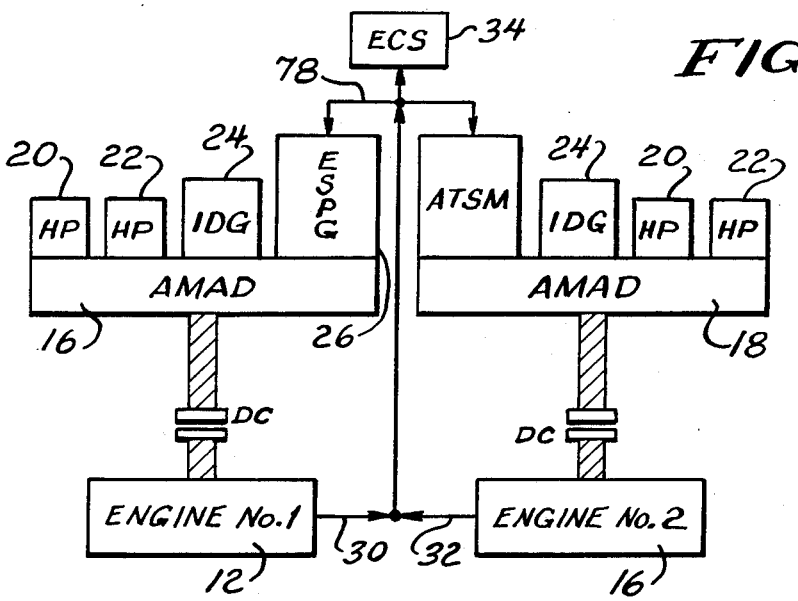
ECS
34
78
20
22
24
ESPG
ATSM
HP
HP
IDG
IDG
HP
HP
AMAD
AMAD
16
26
18
DC
DC
ENGINE No.1
ENGINE No.2
30
32
12
16

FIG. 1

FIG. 2

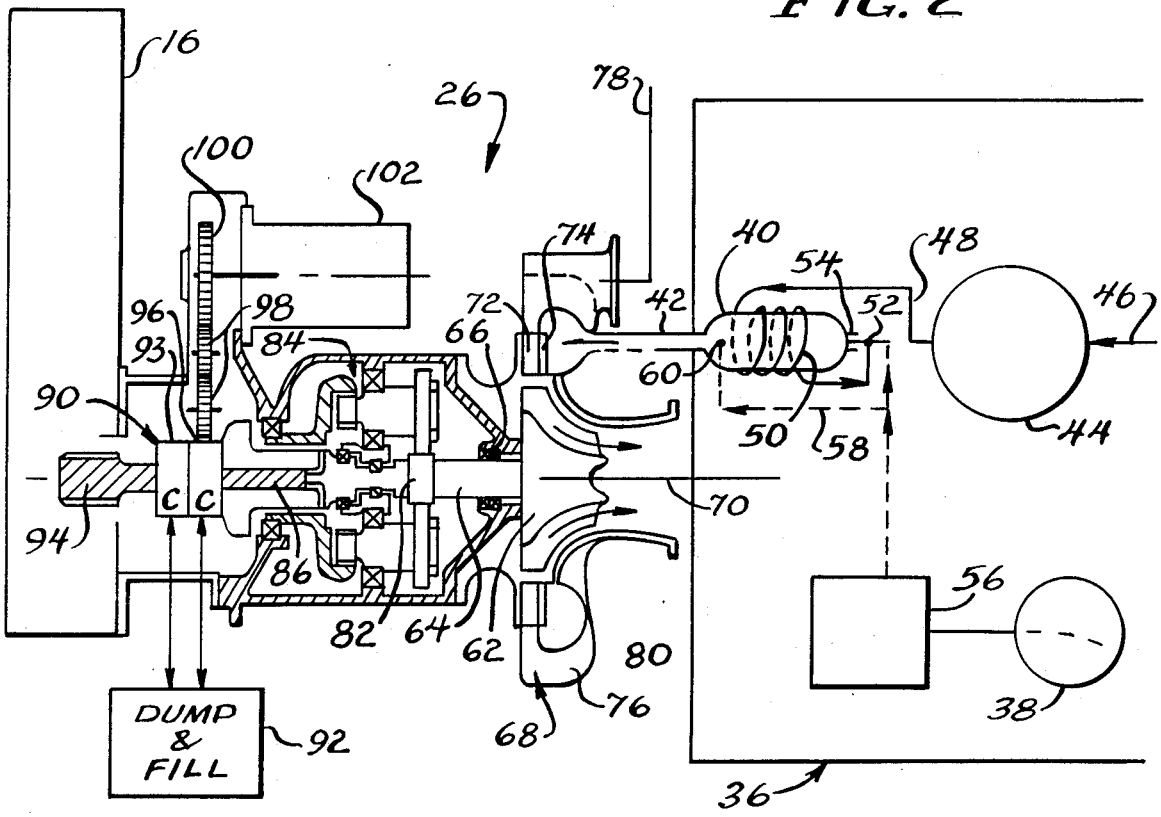
16
26
78
100
102
74
40
54
48
46
96
98
72
42
52
93
84
66
60
90
50
58
44
C
C
70
94
86
56
82
64
62
80
76
38
DUMP & FILL
92
68
36