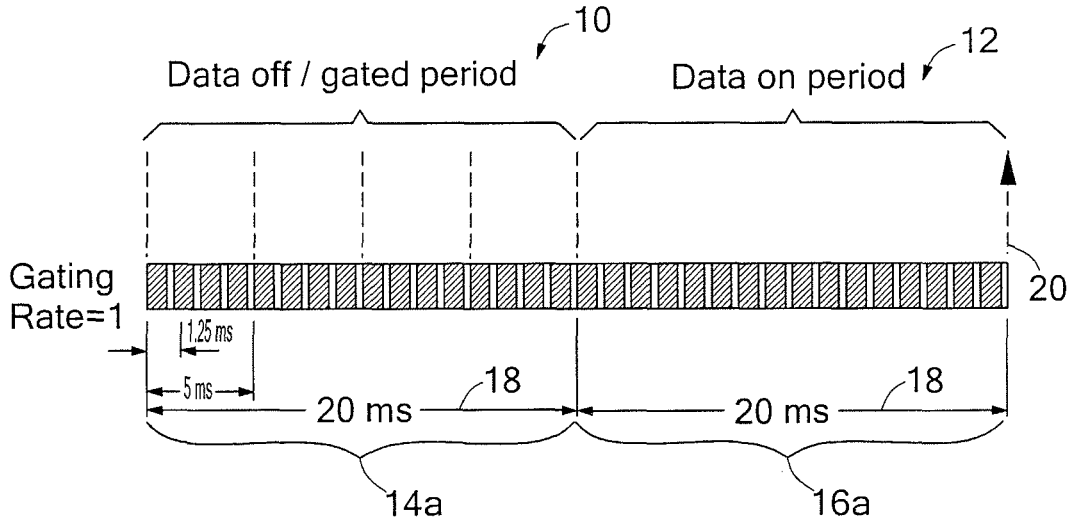

FIG. 1A
Prior Art

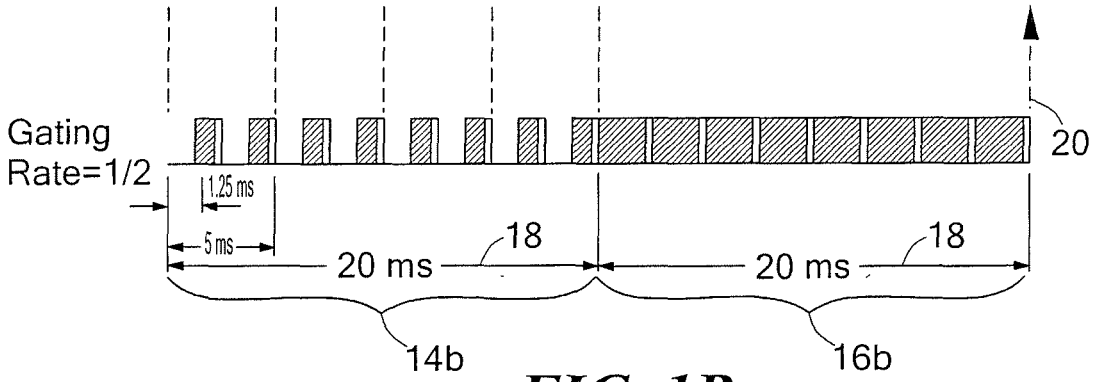

FIG. 1B
Prior Art

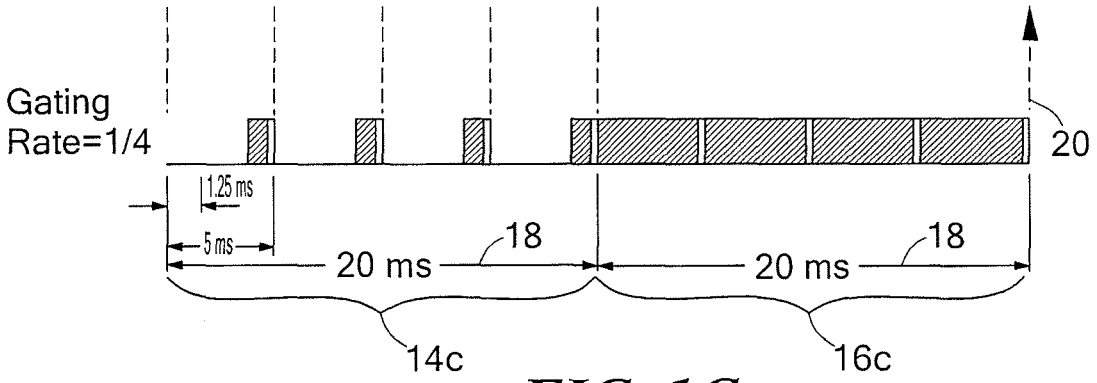

FIG. 1C
Prior Art